Lecture 8

2022/2023

Microwave Devices and Circuits for Radiocommunications

2022/2023

- 2C/1L, **MDCR**
- **Attendance at minimum 7 sessions (course or laboratory)**
- Lectures- **associate professor Radu Damian**
  - Tuesday 12-14, ~~Online~~, P8
  - E – 50% final grade
  - **problems** + (2p atten. lect.) + (3 tests) + (bonus activity)
    - first test L1: 21-28.02.2023 (t2 and t3 not announced, lecture)
    - 3att.=+0.5p
  - **all materials/equipments authorized**

2022/2023

- Laboratory – **associate professor Radu Damian**
  - Tuesday 08-12, II.13 / (08:10)
  - L – 25% final grade
    - ADS, 4 sessions
    - Attendance + **personal results**
  - P – 25% final grade
    - ADS, 3 sessions (-1? 21.02.2022)
    - personal homework

Materials

- http://rf-opto.etti.tuiasi.ro

Laboratorul de Microunde si Opt

Not secure | rf-opto.etti.tuiasi.ro/microwave_cd.php?chg_lang=0

Main **Courses** Master Staff Research Students Admin

Microwave CD Optical Communications Optoelectronics Internet Antennas Practica Networks Educational software

Microwave Devices and Circuits for Radiocommunications (English)

Course: MDCR (2017-2018)

Course Coordinator: Assoc.P. Dr. Radu-Florin Damian
Code: EDOS412T
Discipline Type: DOS; Alternative, Specialty
Credits: 4
Enrollment Year: 4, **Sem.** 7

Activities

Course: Instructor: Assoc.P. Dr. Radu-Florin Damian, 2 Hours/Week, Specialization Section, Timetable:
Laboratory: Instructor: Assoc.P. Dr. Radu-Florin Damian, 1 Hours/Week, Group, Timetable:

Evaluation

Type: **Examen**

A: 50%, (Test/Colloquium)
B: 25%, (Seminary/Laboratory/Project Activity)
D: 25%, (Homework/Specialty papers)

Grades

Aggregate Results

Attendance

Course
Laboratory

Lists

Bonus-uri acumulate (final)
Studenti care nu pot intra in examen

Materials

Course Slides

MDCR Lecture 1 (pdf, 5.43 MB, en,)
MDCR Lecture 2 (pdf, 3.67 MB, en,)
MDCR Lecture 3 (pdf, 4.76 MB, en,)
MDCR Lecture 4 (pdf, 5.58 MB, en,)

RF-OPTO

English | Romana |

Main Courses Master Staff Rese

Grades Student List **Exams** Photos

Online Exams

In order to participate at online exams you must get ready following

Materials

- RF-OPTO
  - **http://rf-opto.etti.tuiasi.ro**
- **David Pozar, "Microwave Engineering"**, Wiley; 4th edition , 2011
  - 1 exam problem ← Pozar
- Photos
  - sent by **email**/online exam
  - used at lectures/laboratory

Access

- ~~Not customized~~

Date:

Grupa	5304 (2015/2016)
Specializarea	Tehnologii si sisteme de telecomunicatii
Marca	5184

Acceseaza ca acest student

Note obtinute

Disciplina	Tip	Data	Descriere	Nota	Puncte	Obs.
TW	Tehnologii Web					
	N	17/01/2014	Nota finala	10	-	
	A	17/01/2014	Colocviu Tehnologii Web 2013/2014	10	7.55	
	B	17/01/2014	Laborator Tehnologii Web 2013/2014	9	-	
	D	17/01/2014	Tema Tehnologii Web 2013/2014	9	-	

Nume

Email

Cod de verificare

344bd9f

Trimite

Online

- access to **online exams** requires the **password** received by email

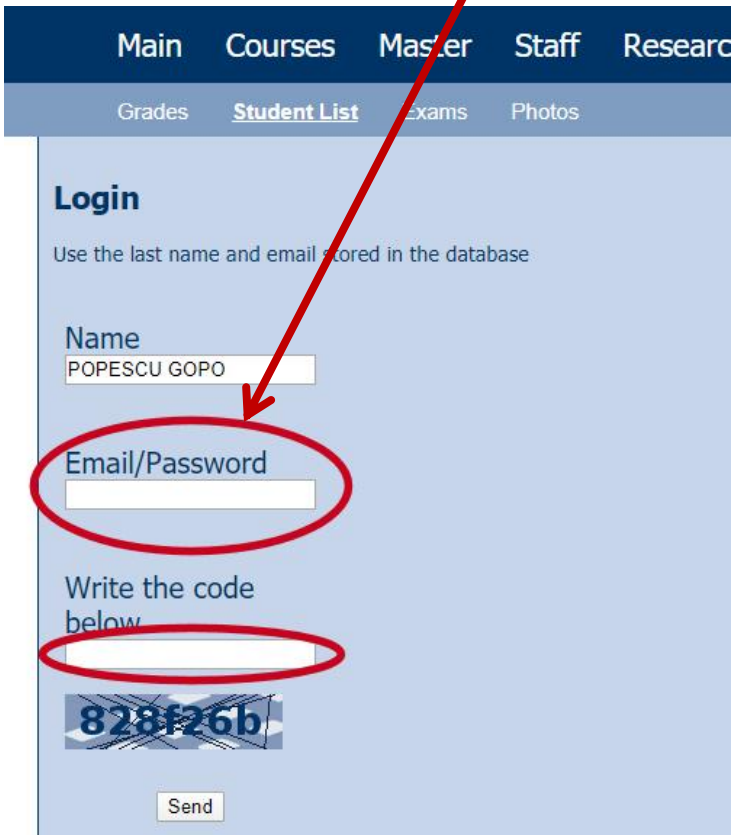

Online

- access email/password

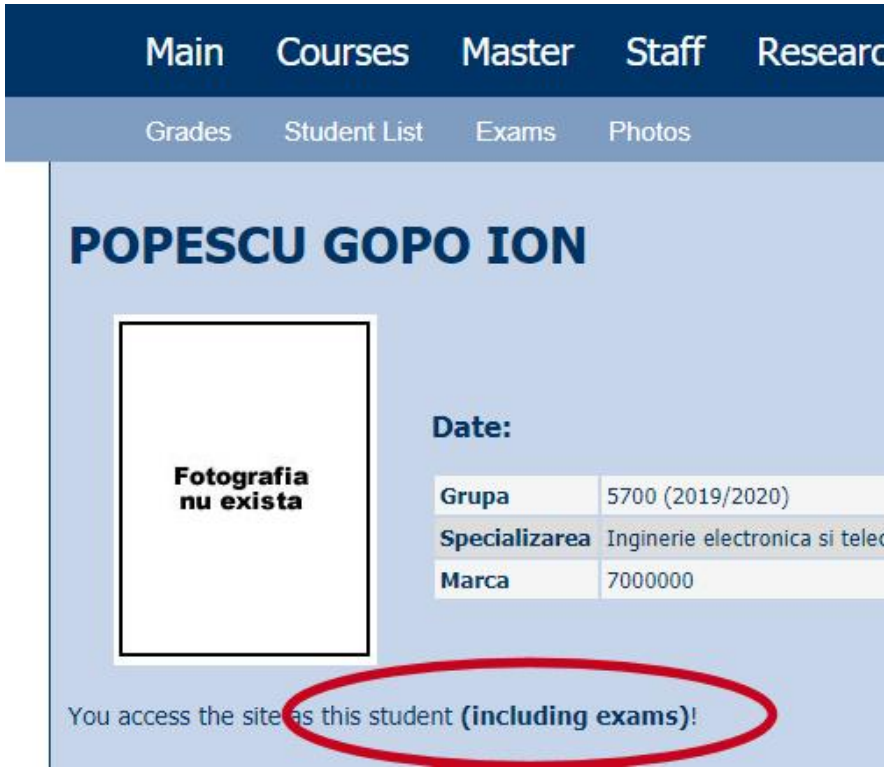

Password

- received by email

Important message from RF-OPTO Inbox ×

Radu-Florin Damian
to me, POPESCU

Romanian > English Translate message

Laboratorul de Microunde si Optoelectronica
Facultatea de Electronica, Telecomunicatii si Tehnologia Informatiei
Universitatea Tehnica "Gh. Asachi" Iasi

In atentia: POPESCU GOPO ION

Parola pentru a accesa examenele pe server-ul **rf-opto** este
Parola: [redacted]

Identificati-va pe server, cu parola, cat mai rapid, pentru confirmare.

Memorati acest mesaj intr-un loc sigur, pentru utilizare ulterioara

---

Attention: POPESCU GOPO ION

The password to access the exams on the **rf-opto** server is
Password: [redacted]

Login to the server, with this password, as soon as possible, for confirmation.

Save this message in a safe place for later use

Reply Reply all Forward

Subject	Correspondents
Important message from RF-OPTO	POPESCU GOPO ION
Validation of MDCR exam from 02/05/2020	[redacted]
[redacted]	[redacted]

From Me <rdamian@etti.tuiasi.ro>
Subject **Important message from RF-OPTO**
To [redacted]
Cc Me <rdamian@etti.tuiasi.ro>

Laboratorul de Microunde si Optoelectronica
Facultatea de Electronica, Telecomunicatii si Tehnologia Informatiei
Universitatea Tehnica "Gh. Asachi" Iasi

In atentia: POPESCU GOPO ION

Parola pentru a accesa examenele pe server-ul **rf-opto** este
Parola: [redacted]

Identificati-va pe server, cu parola, cat mai rapid, pentru confirmare.

Memorati acest mesaj intr-un loc sigur, pentru utilizare ulterioara

---

Attention: POPESCU GOPO ION

The password to access the exams on the **rf-opto** server is
Password: [redacted]

Login to the server, with this password, as soon as possible, for confirmation.

Save this message in a safe place for later use

Online exam manual

- The online exam app used for:
  - ~~lectures (attendance)~~
  - laboratory
  - project
  - ~~examinations~~

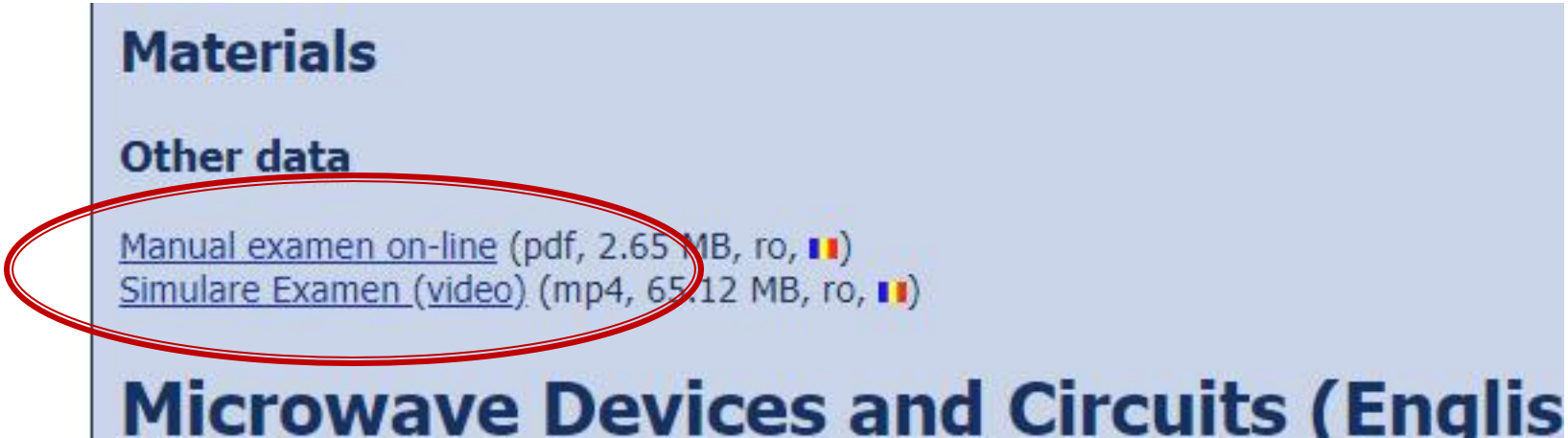

Examen online

- always against a **timetable**
  - long period (lecture attendance/laboratory results)
  - ~~short period (tests: 15min, exam: 2h)~~

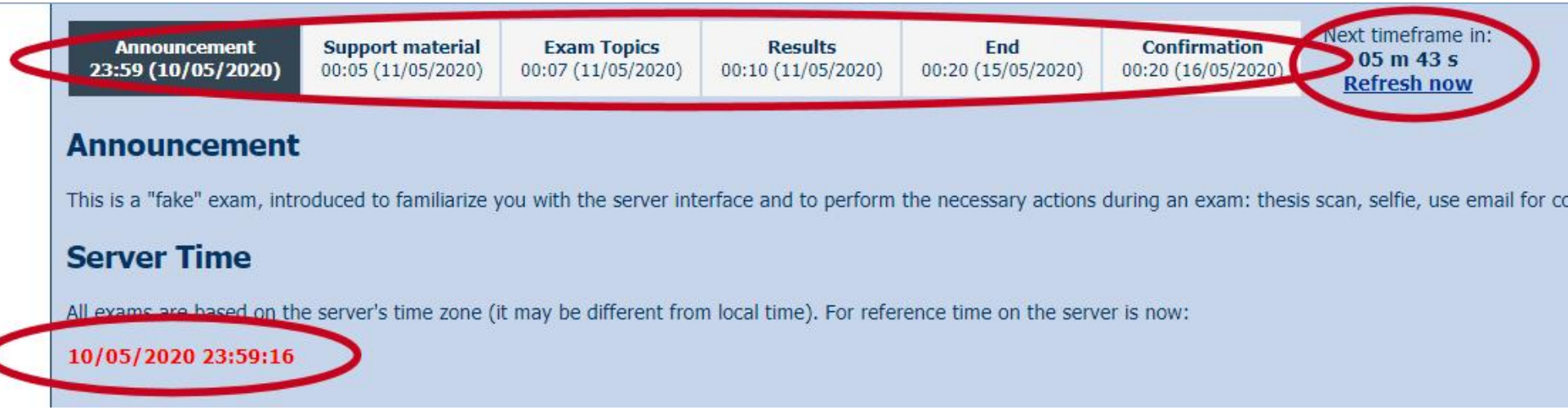

Online results submission

- many numerical values/files

Schema finala	Rezultate - castig	Rezultate - zgomot	Fisier justificare calcul (factor andrei)	Fisier zap (optional)	T1, fisier parmetri S	T2, fisier parmetri S	Z1	Z2	Z3	Z4	Z5	Z6	Z7	Ze1	Zo1	Ze2	Zo2	Ze3	Zo3	Ze4	Zo4	Ze5	Zo5	Ze6
86 - 5428 - 259 ...	86 - 5428 - 260 ...	86 - 5428 - 261 ...	86 - 5428 - 316 ...	-	86 - 5428 - 314 ...	86 - 5428 - 315 ...	148.33	155.88	202.12	164.35	180.91	30.29	185.19	79.9	37	68.89	45.14	61.83	45.05	57.97	46.02	61.85	45.05	68.8
86 - 5622 - 259 ...	86 - 5622 - 260 ...	86 - 5622 - 261 ...	86 - 5622 - 316 ...	86 - 5622 - 262 ...	86 - 5622 - 314 ...	86 - 5622 - 315 ...	26.97	153.5	34.64	35.79	55.56	26.212	10.693	0	0	0	0	0	0	0	0	0	0	0
86 - 5488 - 259 ...	86 - 5488 - 260 ...	86 - 5488 - 261 ...	86 - 5488 - 316 ...	86 - 5488 - 262 ...	86 - 5488 - 314 ...	86 - 5488 - 315 ...	0	0	0	0	0	0	0	0	0	0	0	0	0	0	0	0	0	0
86 - 5391 - 259 ...	86 - 5391 - 260 ...	86 - 5391 - 261 ...	86 - 5391 - 316 ...	-	-	-	50	50	50	50	50	50	50	70.14	40.39	61.85	44.59	55.7	45.2	54.89	45.38	58.65	45.8	70.0
86 - 5664 - 259 ...	86 - 5664 - 260 ...	86 - 5664 - 261 ...	86 - 5664 - 316 ...	-	86 - 5664 - 314 ...	86 - 5664 - 315 ...	168.02	150.5	178.28	133.75	92.12	121.67	144.48	94.36	36.19	70.77	42.56	65.69	42.05	55.17	42.29	65.59	42.05	70.7
86 - 5665 - 259 ...	86 - 5665 - 260 ...	86 - 5665 - 261 ...	86 - 5665 - 316 ...	-	86 - 5665 - 314 ...	86 - 5665 - 315 ...	162.2	80.8	209.2	140.85	135.1	183.7	167.6	94.58	36.15	78.16	39.77	65.57	45.05	65.57	45.05	78.16	39.77	94.5
86 - 5433 - 259 ...	86 - 5433 - 260 ...	86 - 5433 - 261 ...	86 - 5433 - 316 ...	-	86 - 5433 - 314 ...	86 - 5433 - 315 ...	165.138	106.228	226.157	130.134	72.71	180.177	164.616	101.36	36.11	77.22	42.49	68.02	45.62	60	45.42	68.02	45.62	77.2
86 - 5608 - 259 ...	86 - 5608 - 260 ...	86 - 5608 - 261 ...	86 - 5608 - 316 ...	-	86 - 5608 - 314 ...	86 - 5608 - 315 ...	150.84	152.5	30.94	32.37	54.36	19.837	29.85	64.14	40.145	54.32	46.32	53.8	46.7	53.8	46.7	54.32	46.32	54.9
86 - 5555 - 259 ...	86 - 5555 - 260 ...	86 - 5555 - 261 ...	86 - 5555 - 316 ...	-	86 - 5555 - 314 ...	86 - 5555 - 315 ...	168.001	150.288	178.399	133.115	92.491	121.257	144.126	97.05	36.16	71.13	43.09	65.45	42.12	55.66	42.18	65.45	42.12	71.1

Online results submission

- many numerical values

Z1	Z2	Z3	Z4	Z5	Z6	Z7
148.33	155.88	202.12	164.35	180.91	30.29	185.19
26.97	153.5	34.64	35.79	55.56	26.212	10.693
0	0	0	0	0	0	0
50	50	50	50	50	50	50

√

✗

Online results submission

Grade = Quality of the work +

+ Quality of the submission

TEM transmission lines

Course Topics

- Transmission lines
- Impedance matching and tuning
- Directional couplers
- Power dividers
- Microwave amplifier design
- Microwave filters
- ~~Oscillators and mixers~~ ?

The lossless line

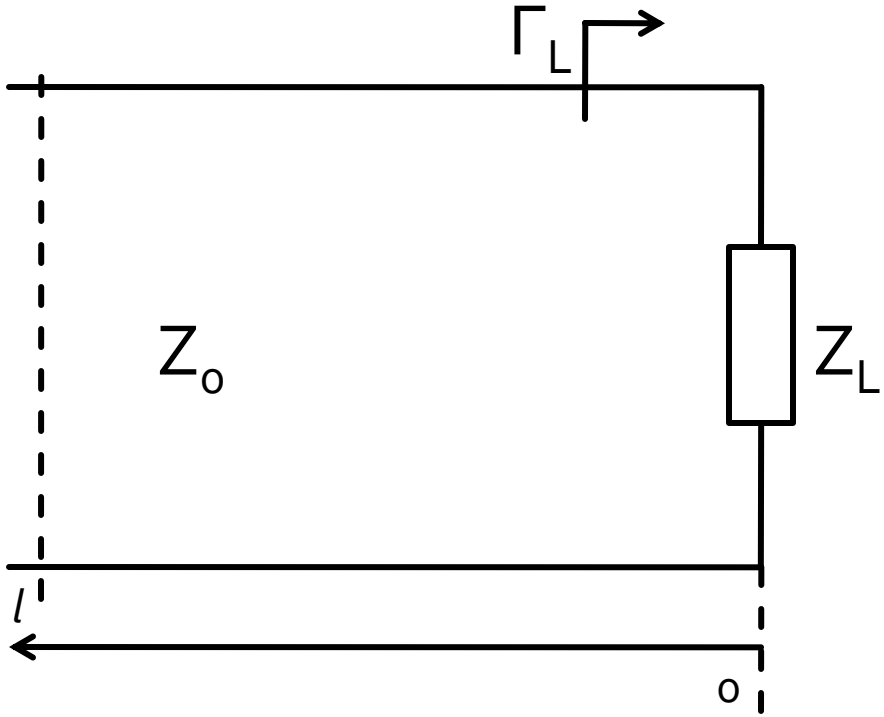

$$V(z) = V_0^+ e^{-j\cdot\beta\cdot z} + V_0^- e^{j\cdot\beta\cdot z}$$

$$I(z) = \frac{V_0^+}{Z_0} e^{-j\cdot\beta\cdot z} - \frac{V_0^-}{Z_0} e^{j\cdot\beta\cdot z}$$

$$Z_L = \frac{V(0)}{I(0)} \qquad Z_L = \frac{V_0^+ + V_0^-}{V_0^+ - V_0^-} \cdot Z_0$$

- voltage reflection coefficient

$$\boxed{\Gamma = \frac{V_0^-}{V_0^+} = \frac{Z_L - Z_0}{Z_L + Z_0}}$$

- Z_o real

The lossless line

$$V(z) = V_0^+ \cdot \left(e^{-j\cdot\beta\cdot z} + \Gamma \cdot e^{j\cdot\beta\cdot z}\right) \qquad I(z) = \frac{V_0^+}{Z_0} \cdot \left(e^{-j\cdot\beta\cdot z} - \Gamma \cdot e^{j\cdot\beta\cdot z}\right)$$

- time-average Power flow along the line

$$P_{avg} = \frac{1}{2} \cdot \mathrm{Re}\left\{V(z) \cdot I(z)^*\right\} = \frac{1}{2} \cdot \frac{\left|V_0^+\right|^2}{Z_0} \cdot \mathrm{Re}\left\{1 - \Gamma^* \cdot e^{-2j\cdot\beta\cdot z} + \Gamma \cdot e^{2j\cdot\beta\cdot z} - \left|\Gamma\right|^2\right\}$$

$$\left(z - z^*\right) = \mathrm{Im}$$

$$P_{avg} = \frac{1}{2} \cdot \frac{\left|V_0^+\right|^2}{Z_0} \cdot \left(1 - \left|\Gamma\right|^2\right)$$

- Total power delivered to the load = Incident power – "Reflected" power
- Return "Loss" [dB]

$$\mathrm{RL} = -20 \cdot \log\left|\Gamma\right| \quad [\mathrm{dB}]$$

The lossless line

- input impedance of a length ***l*** of transmission line with characteristic impedance $\boldsymbol{Z_o}$, loaded with an arbitrary impedance $\boldsymbol{Z_L}$

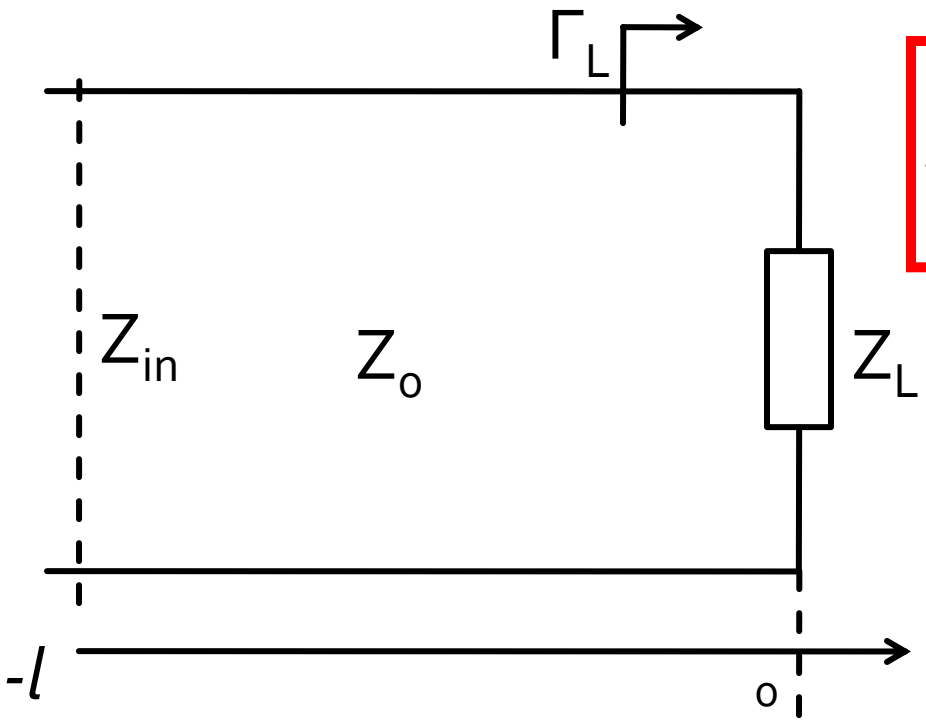

$$Z_{in} = Z_0 \cdot \frac{Z_L + j \cdot Z_0 \cdot \tan \beta \cdot l}{Z_0 + j \cdot Z_L \cdot \tan \beta \cdot l}$$

General theory

Microwave Network Analysis

Scattering matrix – S

- Scattering parameters

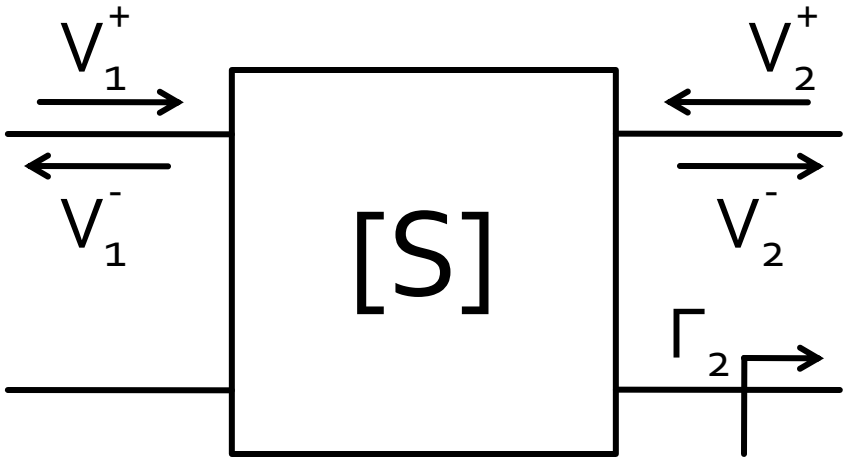

$$\begin{bmatrix} V_1^- \\ V_2^- \end{bmatrix} = \begin{bmatrix} S_{11} & S_{12} \\ S_{21} & S_{22} \end{bmatrix} \cdot \begin{bmatrix} V_1^+ \\ V_2^+ \end{bmatrix}$$

$$S_{11} = \left.\frac{V_1^-}{V_1^+}\right|_{V_2^+=0} \qquad S_{21} = \left.\frac{V_2^-}{V_1^+}\right|_{V_2^+=0}$$

- $V_2^+ = 0$ meaning: port 2 is terminated in matched load to avoid reflections towards the port

$$\Gamma_2 = 0 \rightarrow V_2^+ = 0$$

Scattering matrix – S

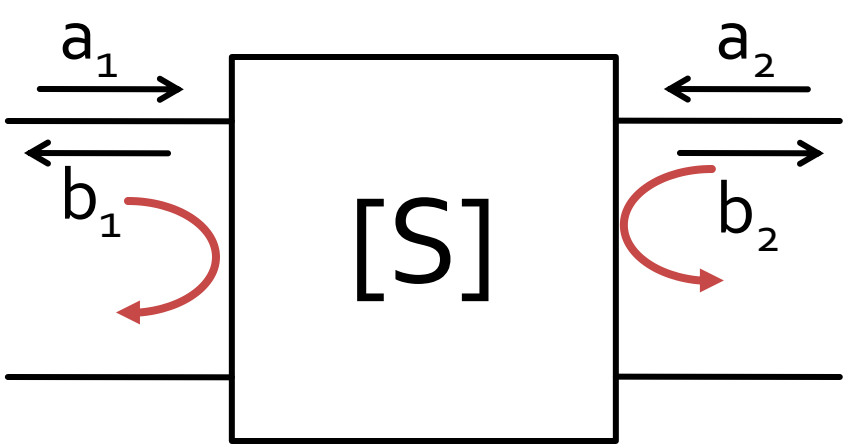

$$\begin{bmatrix} b_1 \\ b_2 \end{bmatrix} = \begin{bmatrix} S_{11} & S_{12} \\ S_{21} & S_{22} \end{bmatrix} \cdot \begin{bmatrix} a_1 \\ a_2 \end{bmatrix}$$

$$S_{11} = \left.\frac{b_1}{a_1}\right|_{a_2=0} \qquad S_{22} = \left.\frac{b_2}{a_2}\right|_{a_1=0}$$

- S_{11} and S_{22} are reflection coefficients at ports 1 and 2 when the other port is matched

Scattering matrix – S

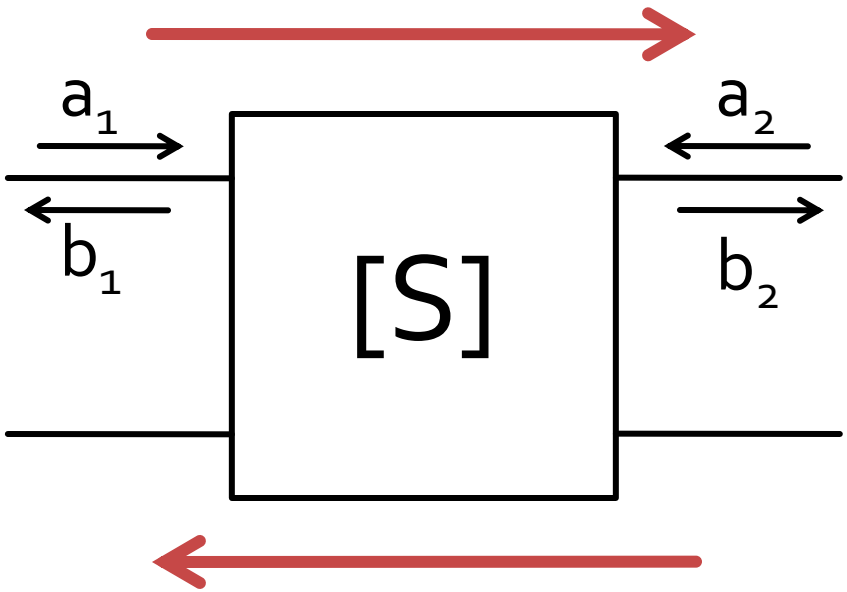

$$\begin{bmatrix} b_1 \\ b_2 \end{bmatrix} = \begin{bmatrix} S_{11} & S_{12} \\ S_{21} & S_{22} \end{bmatrix} \cdot \begin{bmatrix} a_1 \\ a_2 \end{bmatrix}$$

$$S_{21} = \left.\frac{b_2}{a_1}\right|_{a_2=0} \qquad S_{12} = \left.\frac{b_1}{a_2}\right|_{a_1=0}$$

- S_{21} si S_{12} are signal amplitude gain when the other port is matched

Scattering matrix – S

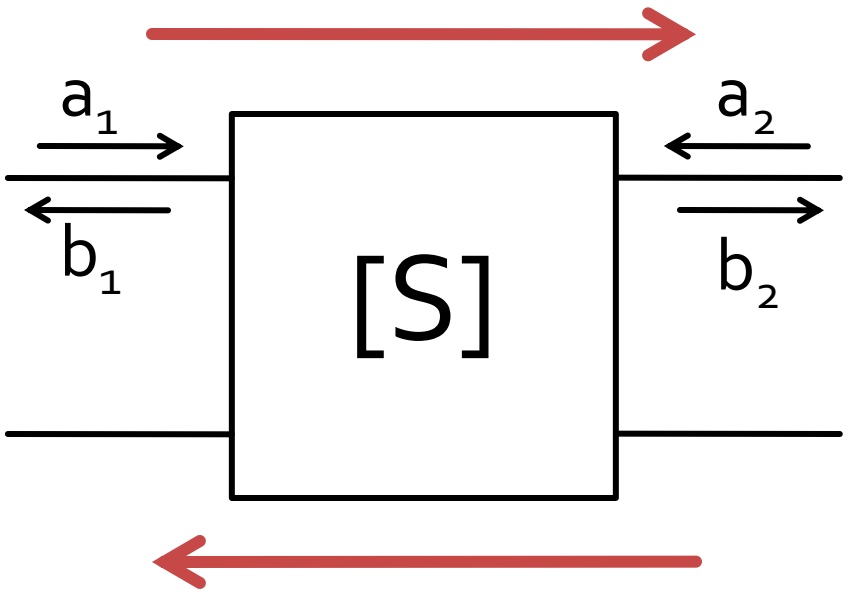

$$\begin{bmatrix} b_1 \\ b_2 \end{bmatrix} = \begin{bmatrix} S_{11} & S_{12} \\ S_{21} & S_{22} \end{bmatrix} \cdot \begin{bmatrix} a_1 \\ a_2 \end{bmatrix}$$

$$|S_{21}|^2 = \frac{Power\ in\ Z_0\ load}{Power\ \ from\ Z_0\ source}$$

- a,b
  - information about signal power **AND** signal phase
- S_{ij}
  - network effect (gain) over signal power **including** phase information

Impedance Matching

The Smith Chart

The Smith Chart

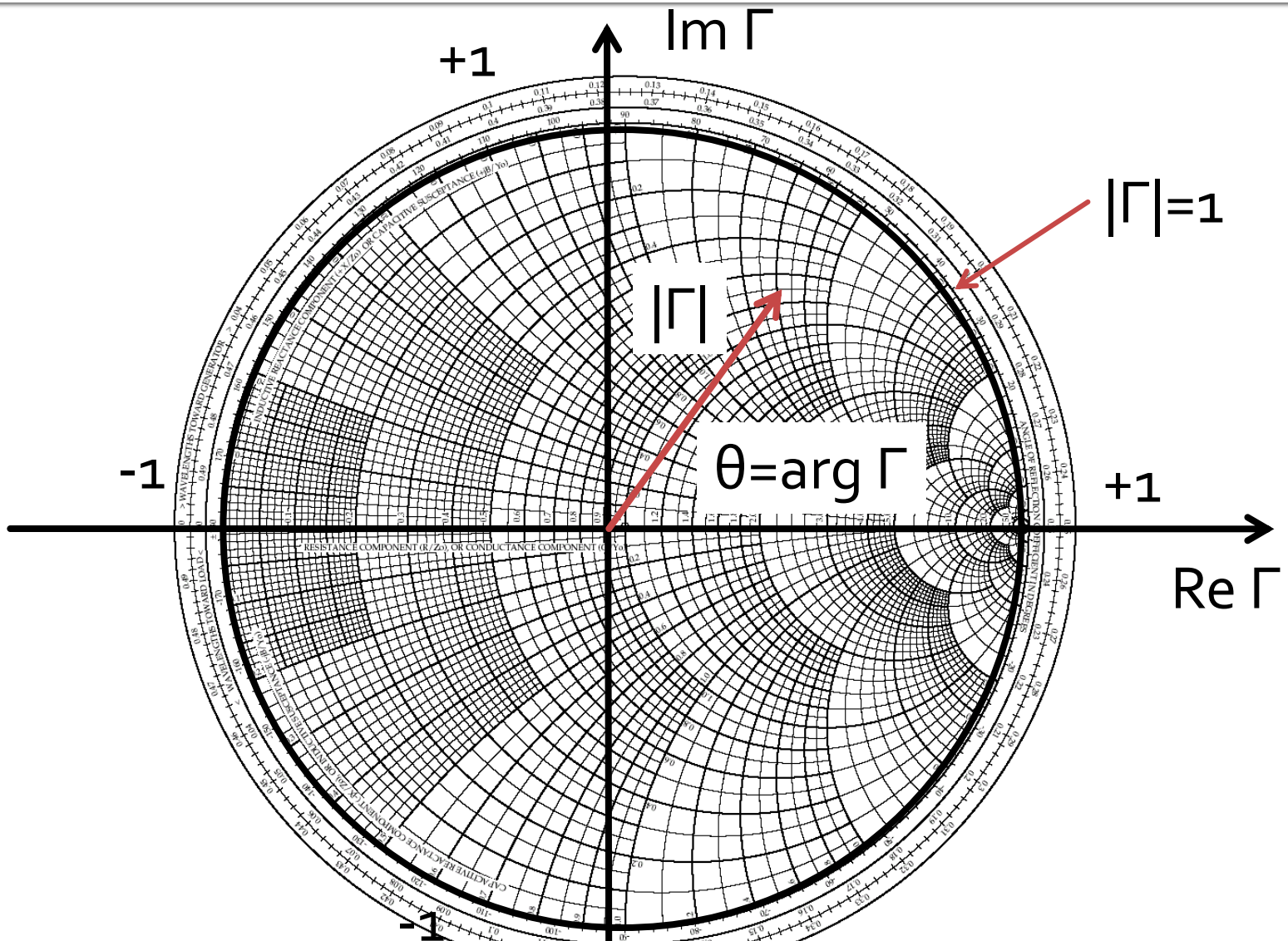

The Smith Chart

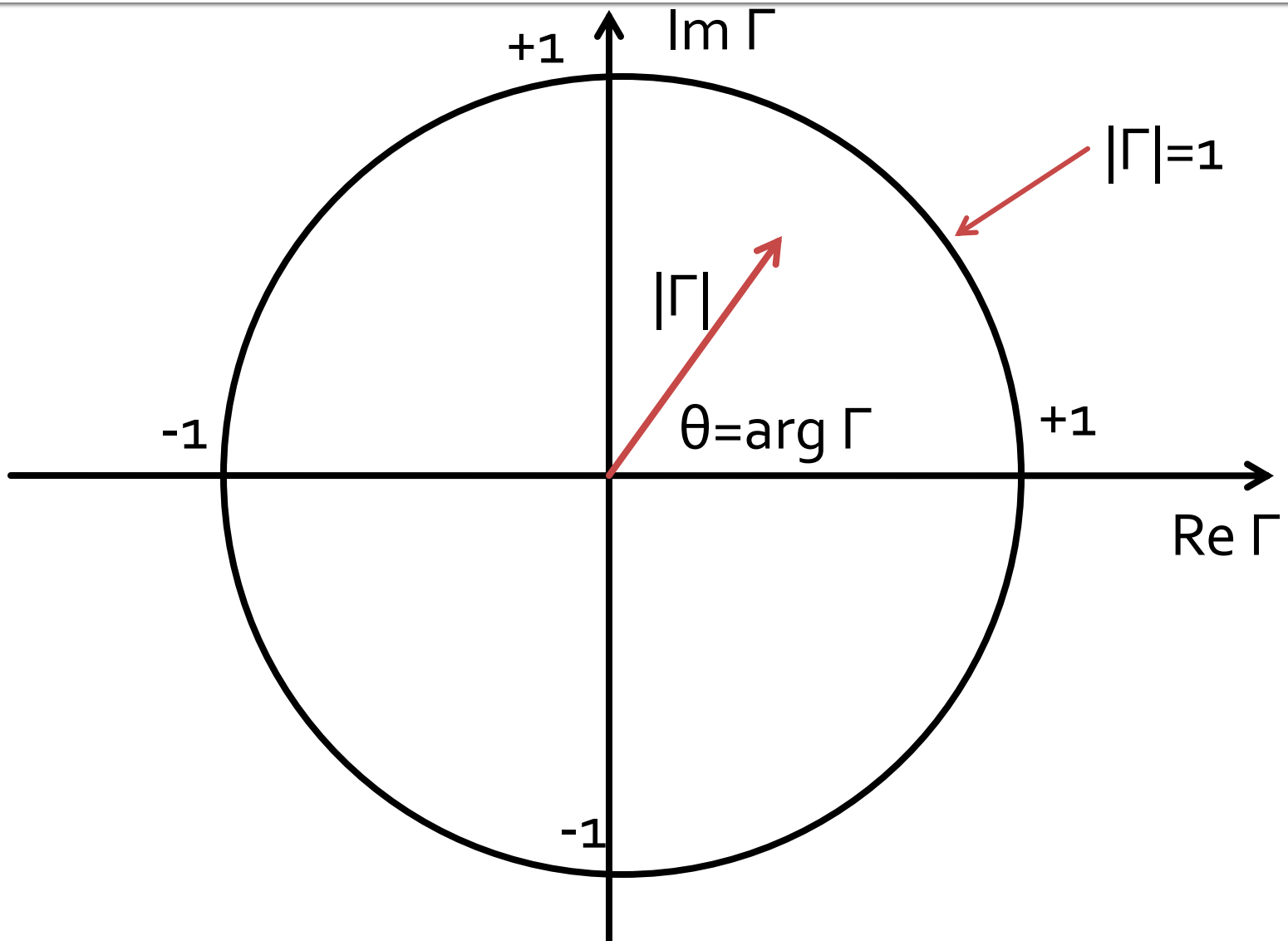

Impedance matching

Impedance Matching with lumped elements (L Networks)

Course Topics

- Transmission lines
- Impedance matching and tuning
- Directional couplers
- Power dividers
- Microwave amplifier design
- Microwave filters
- ~~Oscillators and mixers~~ ?

The Smith Chart, reflection coefficient, impedance matching

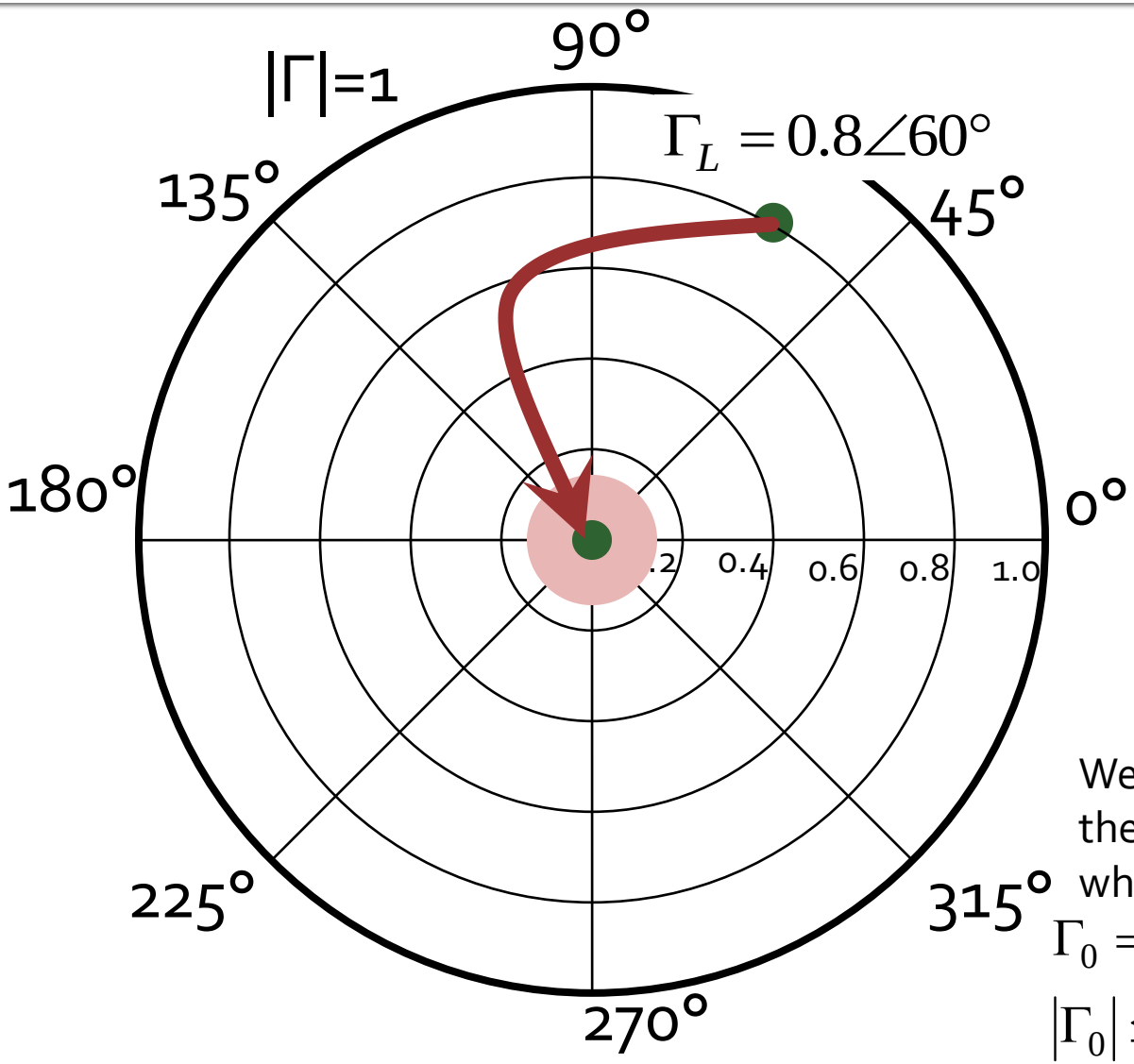

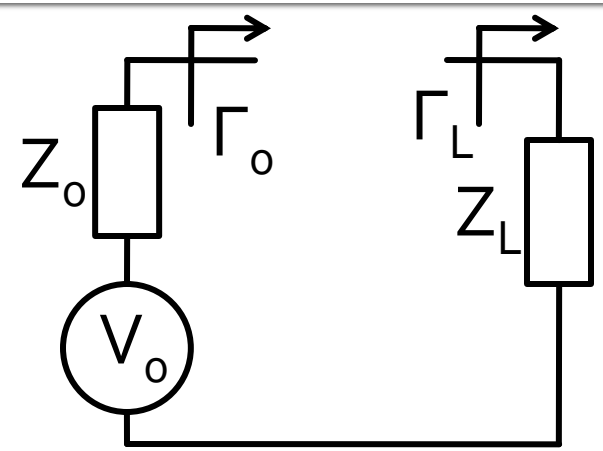

Matching Z_L load to Z_o source.
We normalize Z_L over Z_o

$$Z_L = 21.429\Omega + j \cdot 82.479\Omega$$
$$z_L = 0.429 + j \cdot 1.65$$
$$\Gamma_L = 0.8\angle 60°$$

We must move the point denoting the reflection coefficient in the area where with a Z_o source we have:

$\Gamma_0 = 0$ perfect match

$|\Gamma_0| \le \Gamma_m$ "good enough" match

Matching, series reactance

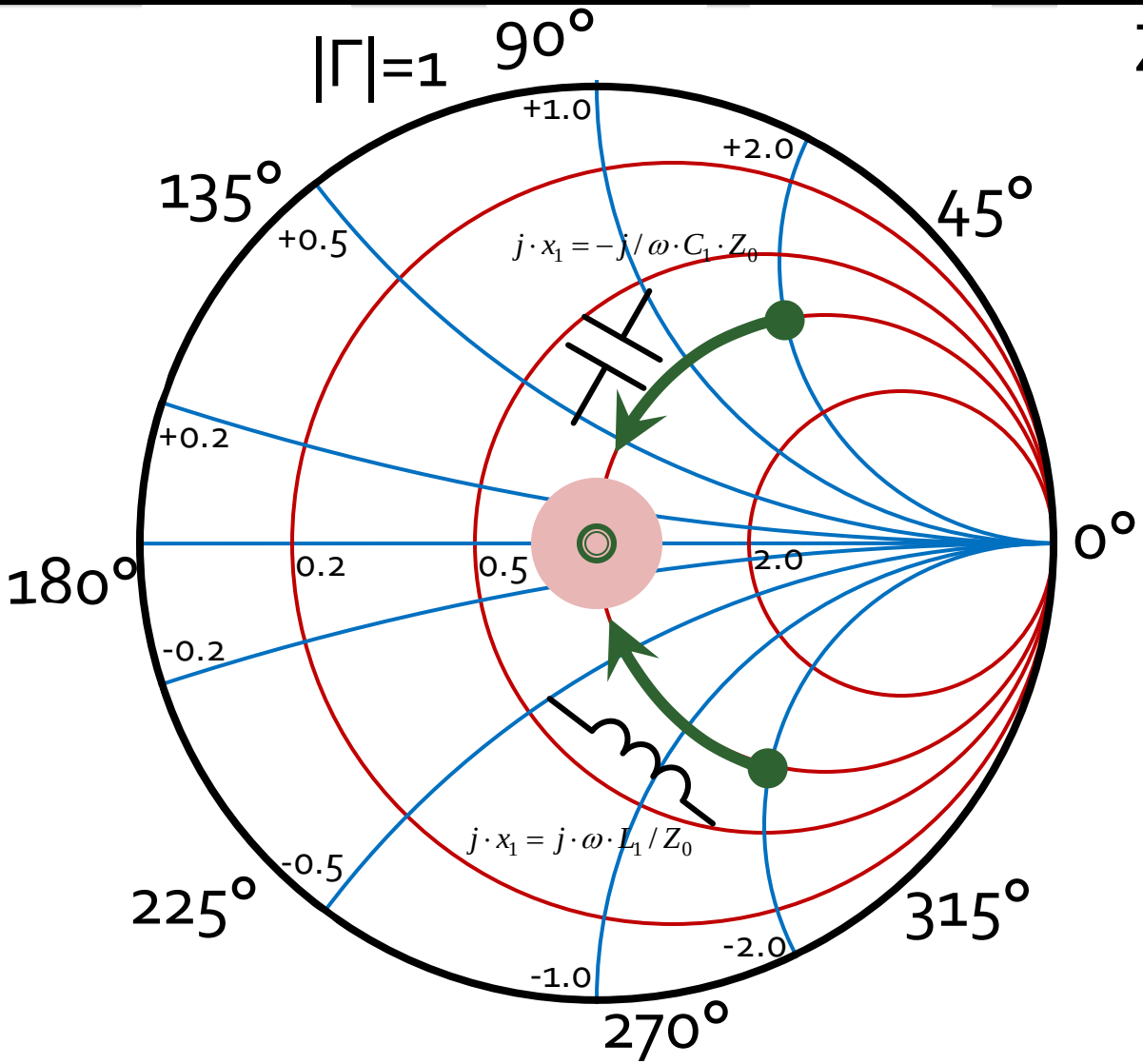

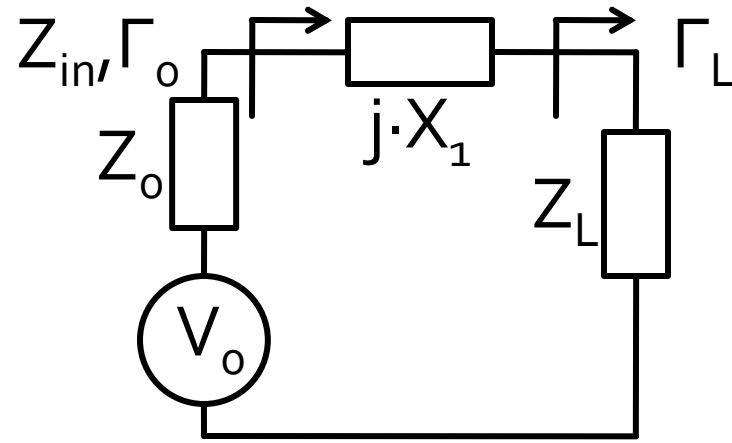

$$z_L = r_L + j \cdot x_L$$

$$z_{in} = r_L + j \cdot (x_L + x_1)$$

$$\boxed{r_{in} = r_L}$$

- Match can be obtained **if and only if** $r_L = 1$
- we compensate the reactive part of the load

$$j \cdot x_1 = -j \cdot x_L$$

Smith chart, r=1 and g=1

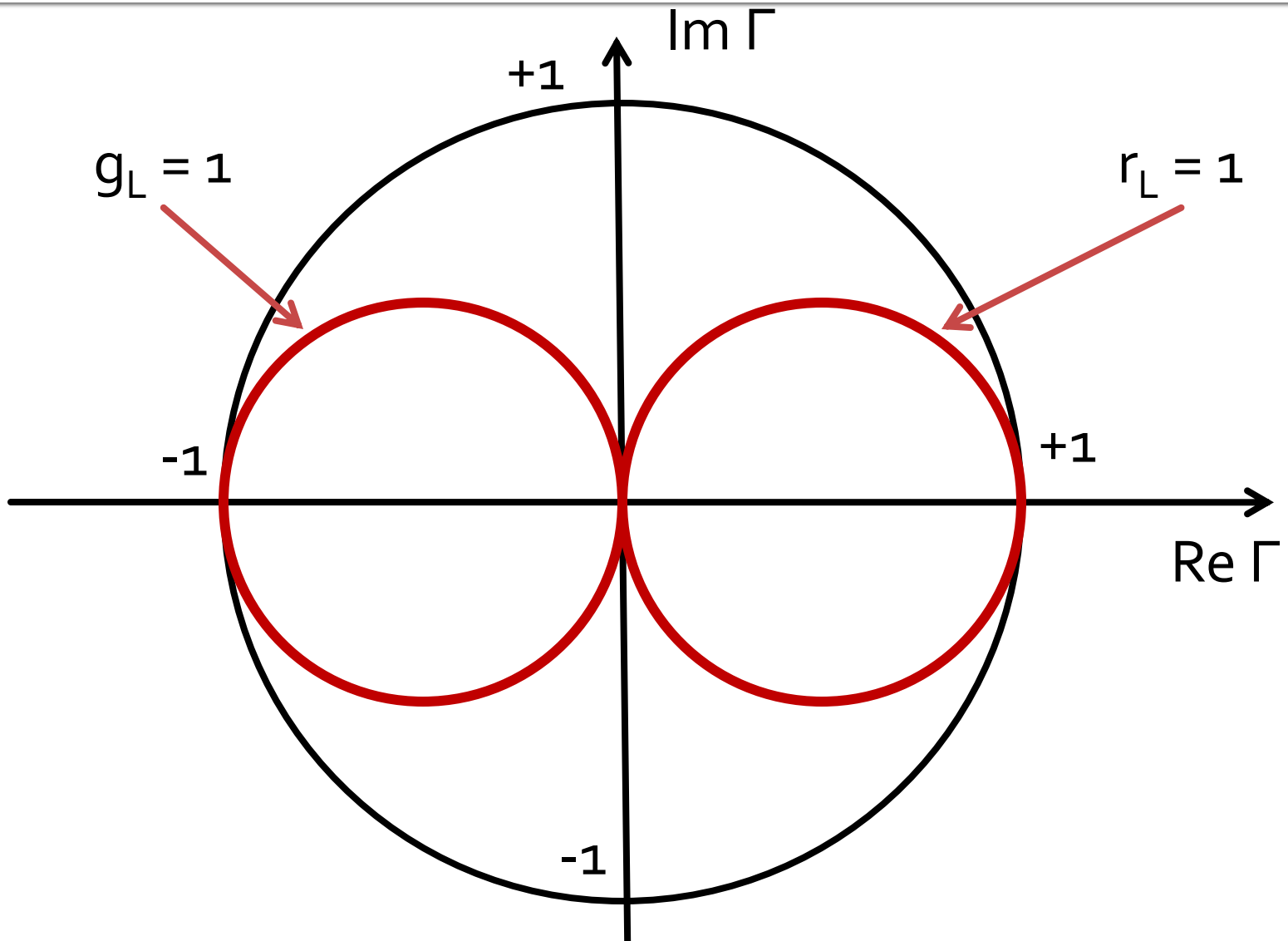

Matching with 2 reactive elements (L Networks)

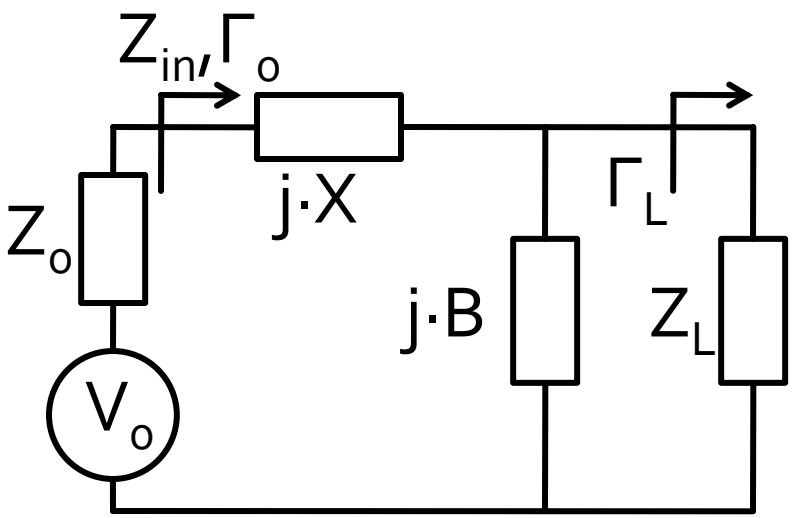

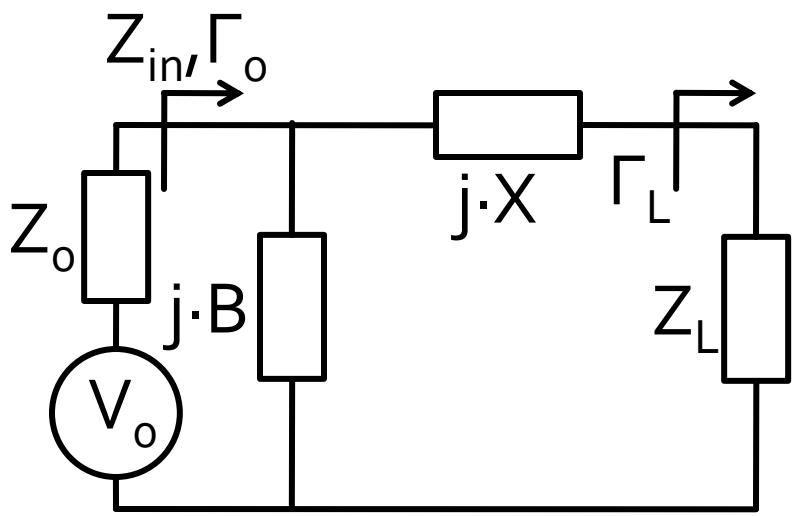

- Two steps matching
  - first reactive element moves the reflection coefficient **on the circle** $r_L = 1/g_L = 1$
  - second element compensates the remaining reactance and achieves the impedance match

series C, shunt C / shunt C, series C

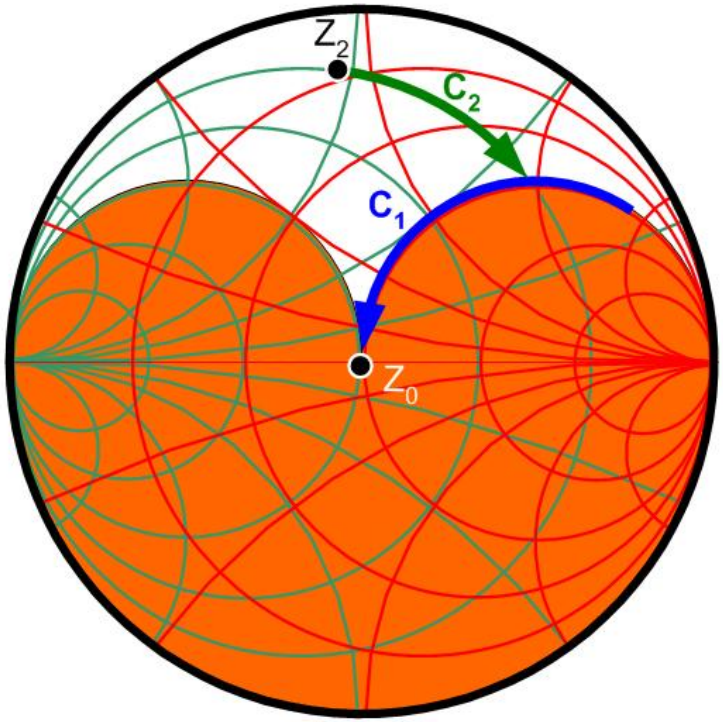

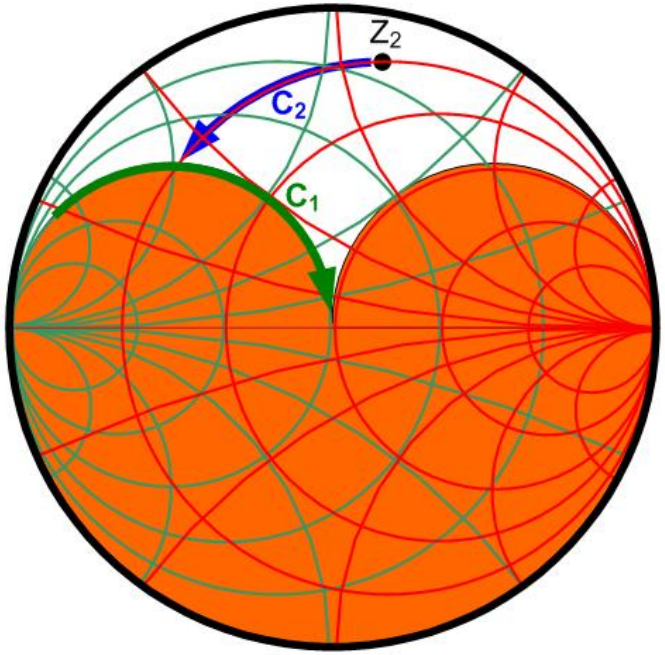

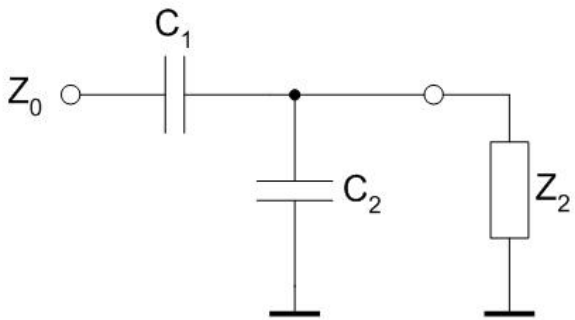

Forbidden area for current network

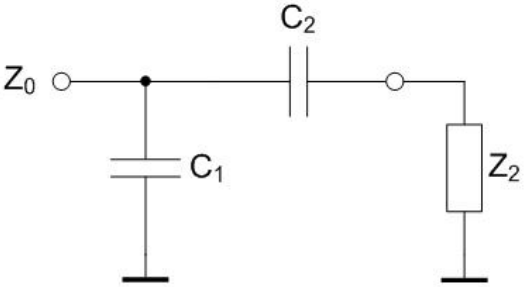

Matching with 2 reactive elements (L Networks)

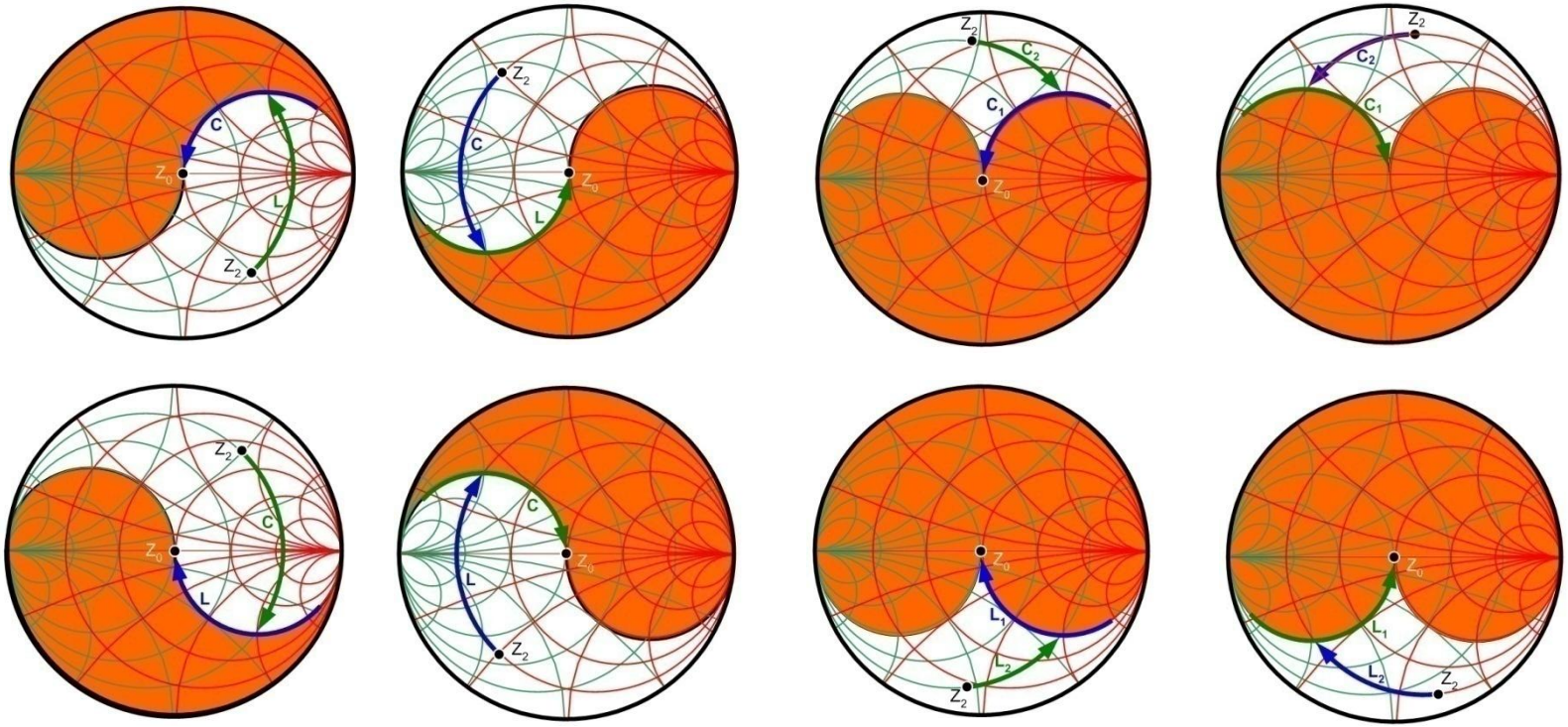

Forbidden area for current network

Impedance Matching

Impedance Matching with Stubs

Smith chart, r=1 and g=1

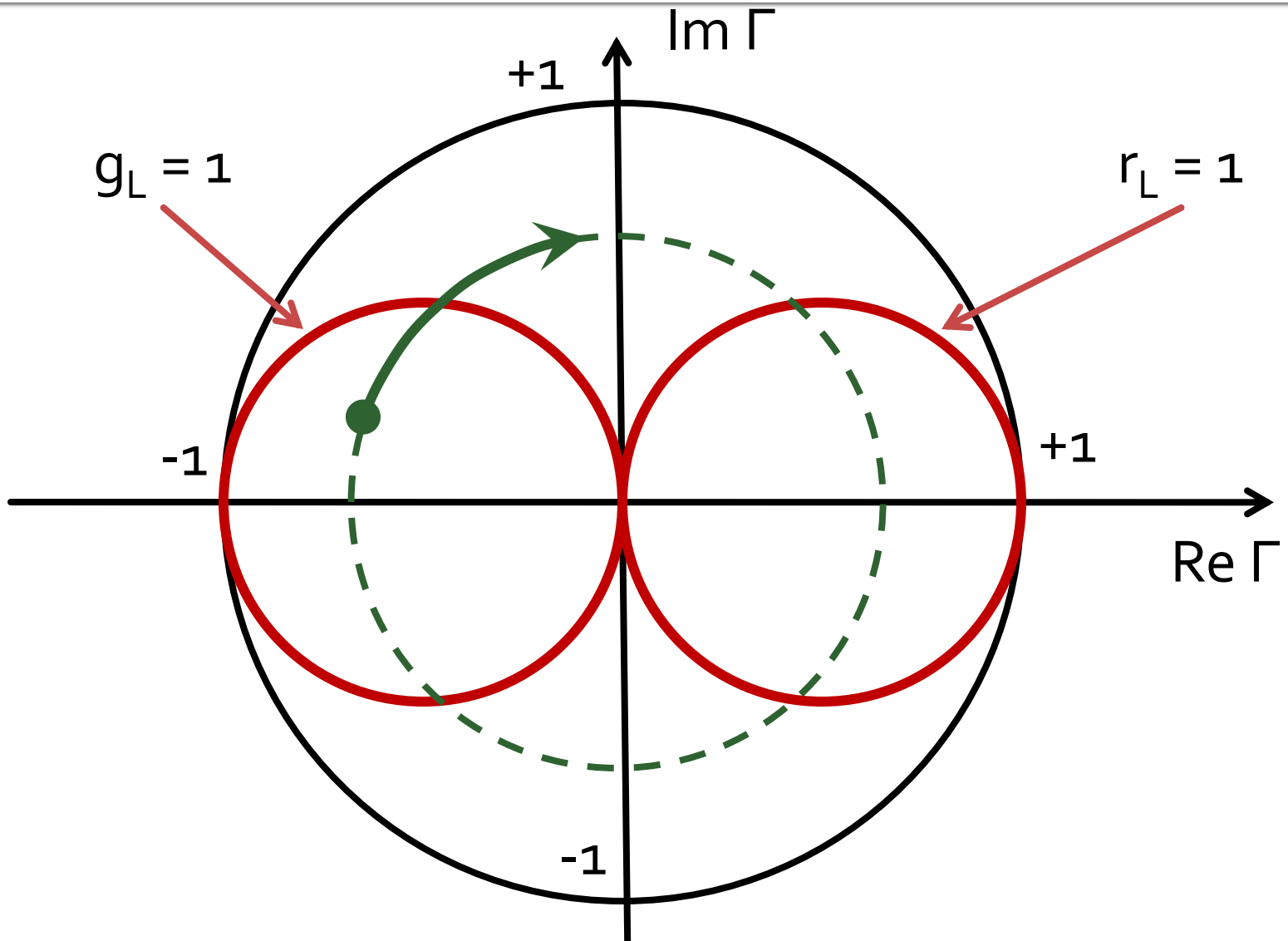

Single stub tuning

- Shunt Stub

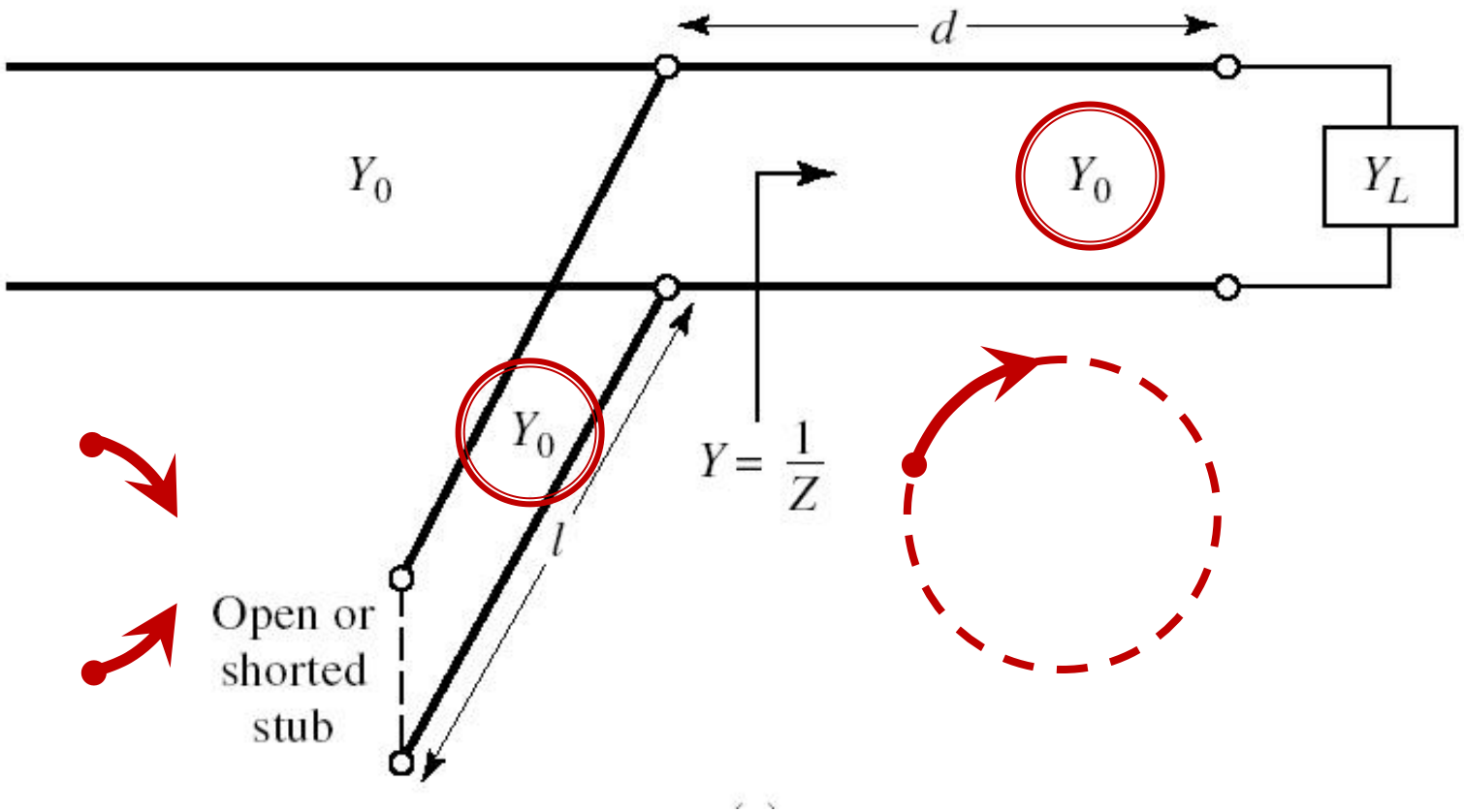

Single stub tuning

- Series Stub
- difficult to realize in single conductor line technologies (microstrip)

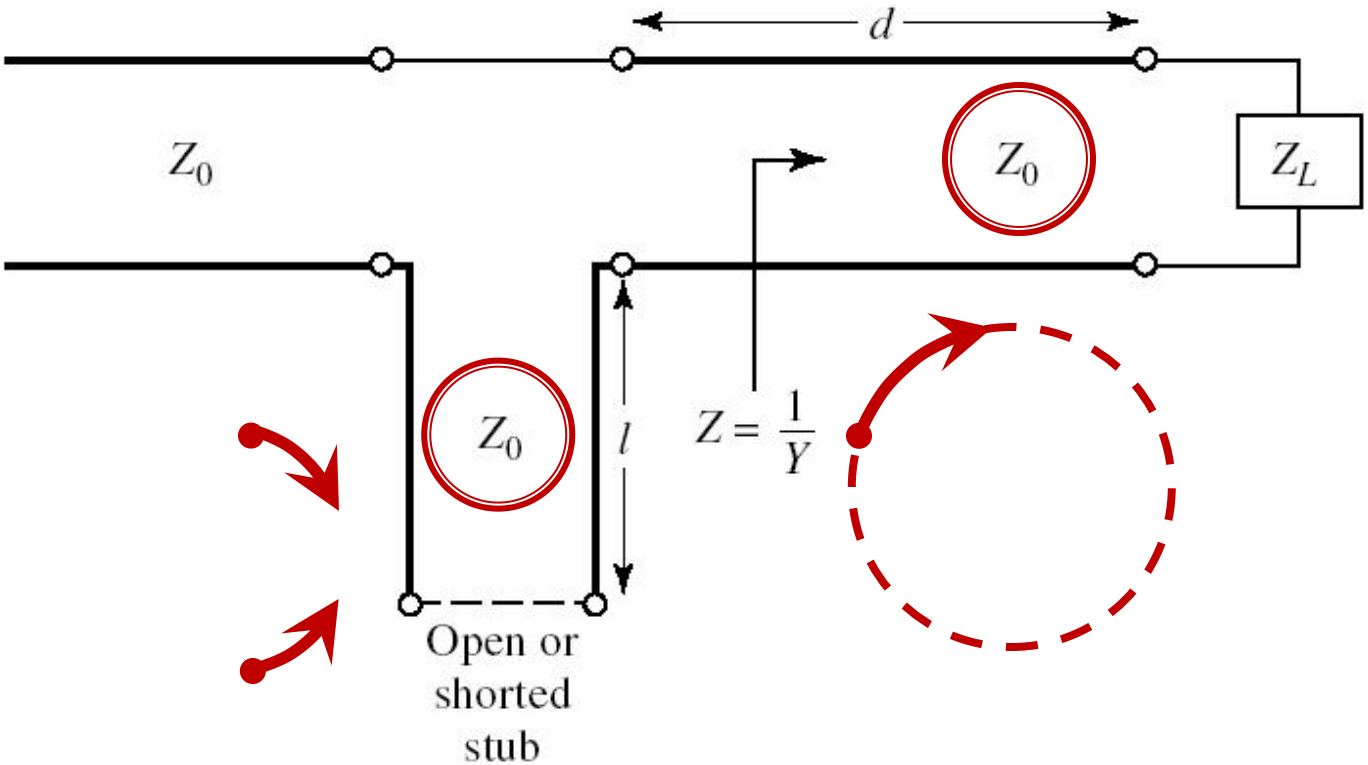

Analytical solutions

Exam / Project

Case 1, Shunt Stub

- Shunt Stub

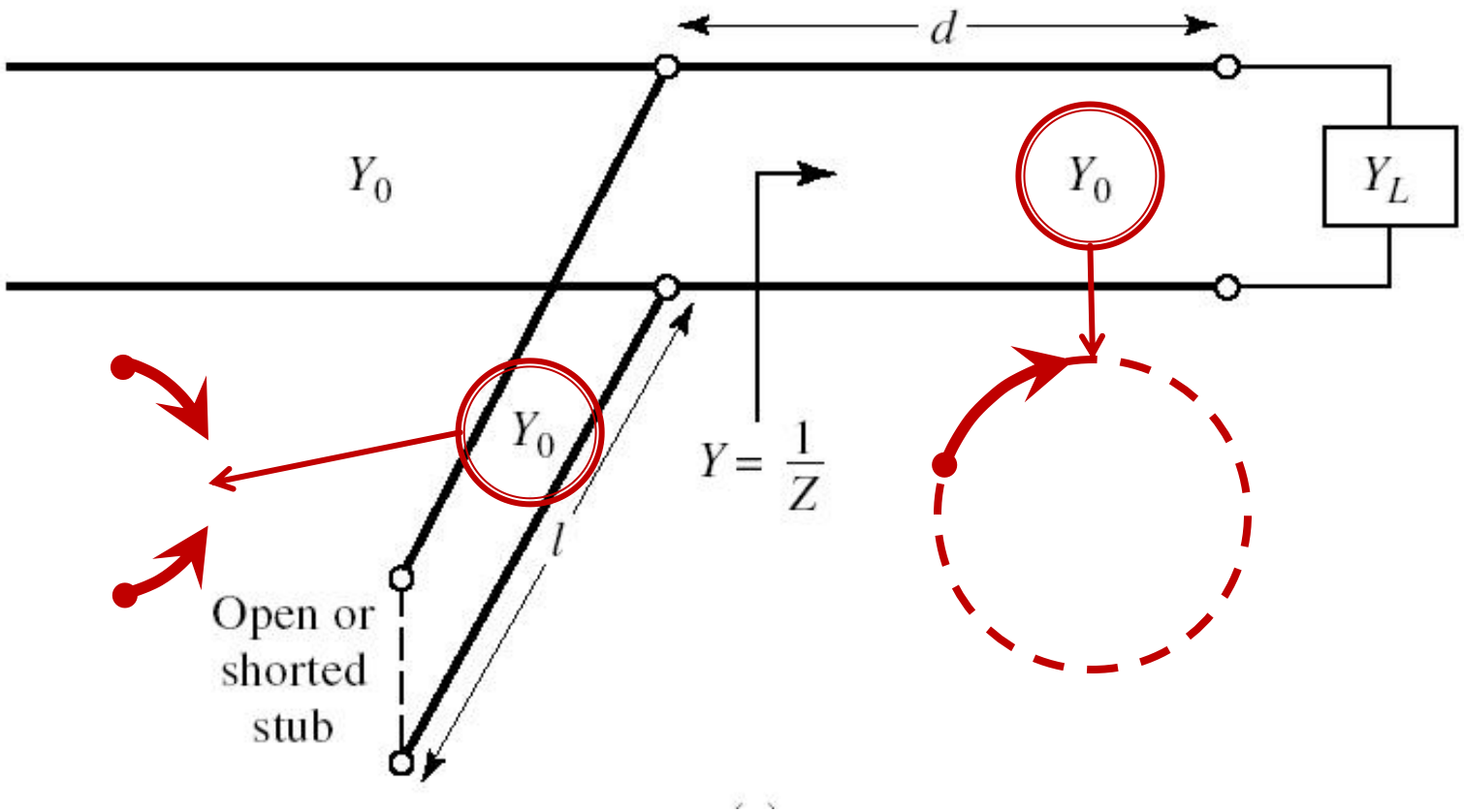

Analytical solution, usage

$$\boxed{\cos(\varphi + 2\theta) = -|\Gamma_S|}$$

$$\boxed{\theta_{sp} = \beta \cdot l = \tan^{-1} \frac{\mp 2 \cdot |\Gamma_S|}{\sqrt{1 - |\Gamma_S|^2}}}$$

$$\Gamma_S = 0.593\angle 46.85°$$

$$|\Gamma_S| = 0.593; \quad \varphi = 46.85° \qquad \cos(\varphi + 2\theta) = -0.593 \Rightarrow (\varphi + 2\theta) = \pm 126.35°$$

- The **sign** (+/-) chosen for the **series line** equation imposes the **sign** used for the **shunt stub** equation
  - **"+" solution**

    $$(46.85° + 2\theta) = +126.35° \qquad \theta = +39.7° \qquad \operatorname{Im} y_S = \frac{-2 \cdot |\Gamma_S|}{\sqrt{1 - |\Gamma_S|^2}} = -1.472$$

    $$\theta_{sp} = \tan^{-1}(\operatorname{Im} y_S) = -55.8°(+180°) \rightarrow \theta_{sp} = 124.2°$$

  - **"-" solution**

    $$(46.85° + 2\theta) = -126.35° \qquad \theta = -86.6°(+180°) \rightarrow \theta = 93.4°$$

    $$\operatorname{Im} y_S = \frac{+2 \cdot |\Gamma_S|}{\sqrt{1 - |\Gamma_S|^2}} = +1.472 \qquad \theta_{sp} = \tan^{-1}(\operatorname{Im} y_S) = 55.8°$$

Analytical solution, usage

$$(\varphi+2\theta)=\begin{cases}+126.35^\circ\\-126.35^\circ\end{cases}\quad \theta=\begin{cases}39.7^\circ\\93.4^\circ\end{cases}\quad \mathrm{Im}[y_S(\theta)]=\begin{cases}-1.472\\+1.472\end{cases}\quad \theta_{sp}=\begin{cases}-55.8^\circ+180^\circ=124.2^\circ\\+55.8^\circ\end{cases}$$

- We choose **one** of the two possible solutions
- The **sign** (+/-) chosen for the **series line** equation imposes the **sign** used for the **shunt stub** equation

$$l_1=\frac{39.7^\circ}{360^\circ}\cdot\lambda=0.110\cdot\lambda$$

$$l_2=\frac{124.2^\circ}{360^\circ}\cdot\lambda=0.345\cdot\lambda$$

$$l_1=\frac{93.4^\circ}{360^\circ}\cdot\lambda=0.259\cdot\lambda$$

$$l_2=\frac{55.8^\circ}{360^\circ}\cdot\lambda=0.155\cdot\lambda$$

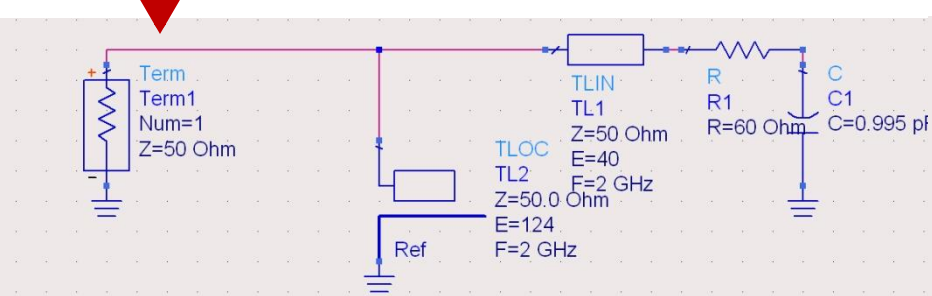

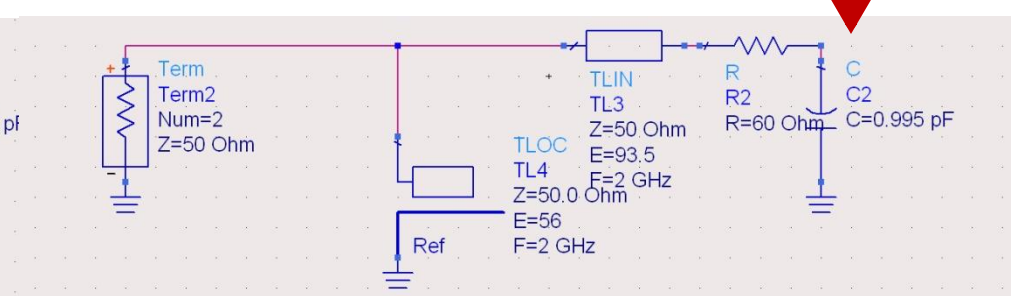

Case 2, Series Stub

- Series Stub
- difficult to realize in single conductor line technologies (microstrip)

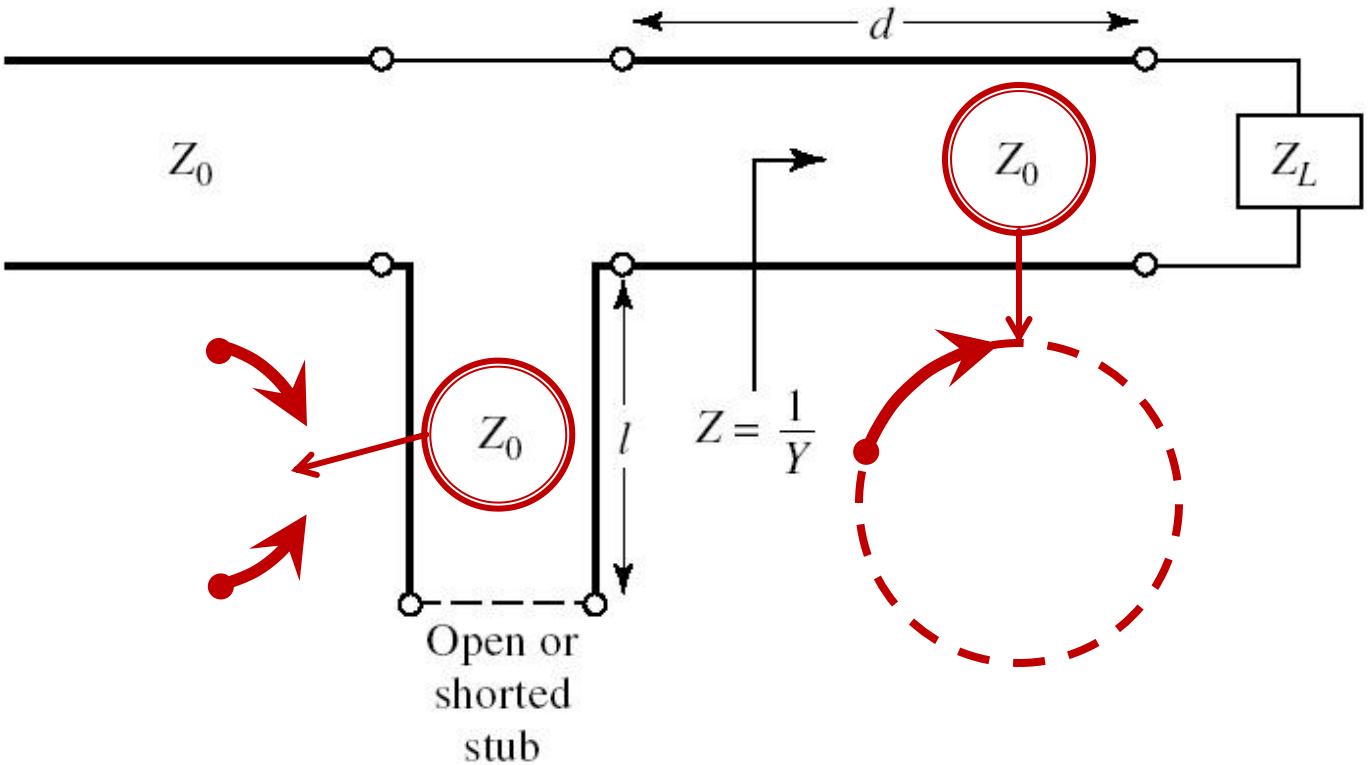

Analytical solution, usage

$$\boxed{\cos(\varphi + 2\theta) = |\Gamma_S|}$$

$$\boxed{\theta_{ss} = \beta \cdot l = \cot^{-1} \frac{\mp 2 \cdot |\Gamma_S|}{\sqrt{1 - |\Gamma_S|^2}}}$$

$$\Gamma_S = 0.555\angle -29.92^\circ$$

$$|\Gamma_S| = 0.555; \quad \varphi = -29.92^\circ \qquad \cos(\varphi + 2\theta) = 0.555 \Rightarrow (\varphi + 2\theta) = \pm 56.28^\circ$$

- The **sign** (+/-) chosen for the **series line** equation imposes the **sign** used for the **series stub** equation
  - **"+" solution**

$$(-29.92^\circ + 2\theta) = +56.28^\circ \qquad \theta = 43.1^\circ \qquad \operatorname{Im} z_S = \frac{+2 \cdot |\Gamma_S|}{\sqrt{1 - |\Gamma_S|^2}} = +1.335$$

$$\theta_{ss} = -\cot^{-1}(\operatorname{Im} z_S) = -36.8^\circ(+180^\circ) \rightarrow \theta_{ss} = 143.2^\circ$$

  - **"-" solution**

$$(-29.92^\circ + 2\theta) = -56.28^\circ \qquad \theta = -13.2^\circ(+180^\circ) \rightarrow \theta = 166.8^\circ$$

$$\operatorname{Im} z_S = \frac{-2 \cdot |\Gamma_S|}{\sqrt{1 - |\Gamma_S|^2}} = -1.335 \qquad \theta_{ss} = -\cot^{-1}(\operatorname{Im} z_S) = 36.8^\circ$$

Analytical solution, usage

$$(\varphi+2\theta)=\begin{cases}+56.28^\circ\\-56.28^\circ\end{cases}\quad \theta=\begin{cases}43.1^\circ\\166.8^\circ\end{cases}\quad \mathrm{Im}[z_S(\theta)]=\begin{cases}+1.335\\-1.335\end{cases}\quad \theta_{ss}=\begin{cases}-36.8^\circ+180^\circ=143.2^\circ\\+36.8^\circ\end{cases}$$

- We choose **one** of the two possible solutions
- The **sign** (+/-) chosen for the **series line** equation imposes the **sign** used for the **series stub** equation

$$l_1=\frac{43.1^\circ}{360^\circ}\cdot\lambda=0.120\cdot\lambda$$

$$l_2=\frac{143.2^\circ}{360^\circ}\cdot\lambda=0.398\cdot\lambda$$

$$l_1=\frac{166.8^\circ}{360^\circ}\cdot\lambda=0.463\cdot\lambda$$

$$l_2=\frac{36.8^\circ}{360^\circ}\cdot\lambda=0.102\cdot\lambda$$

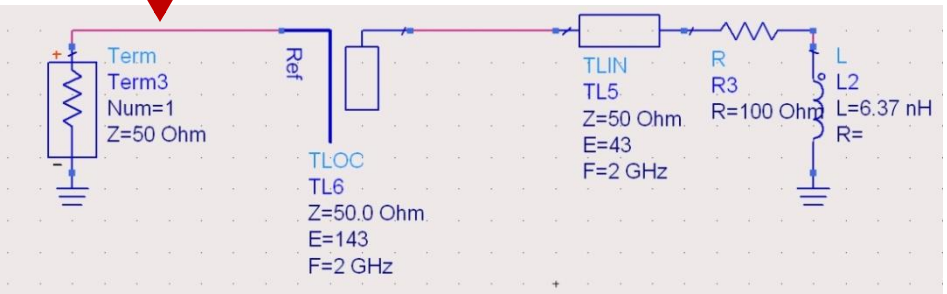

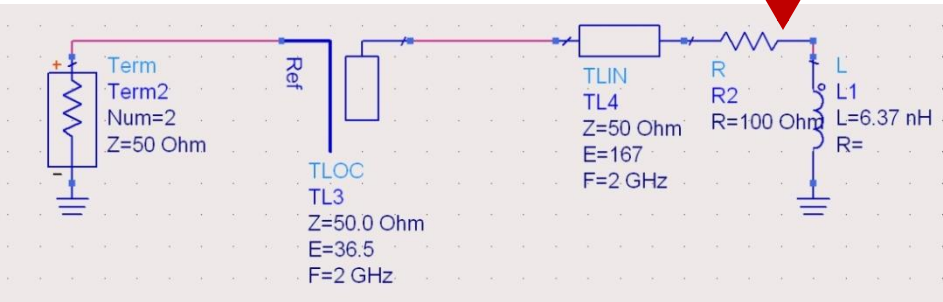

Impedance Matching with Stubs

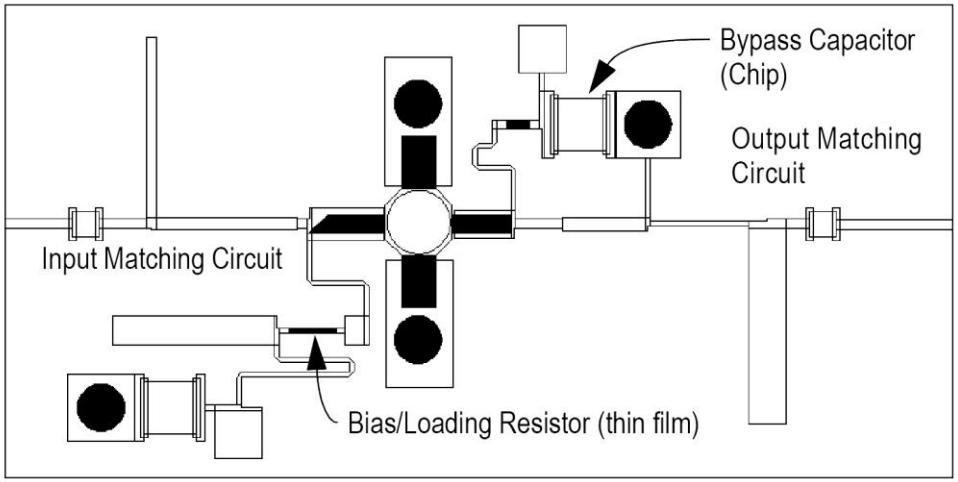

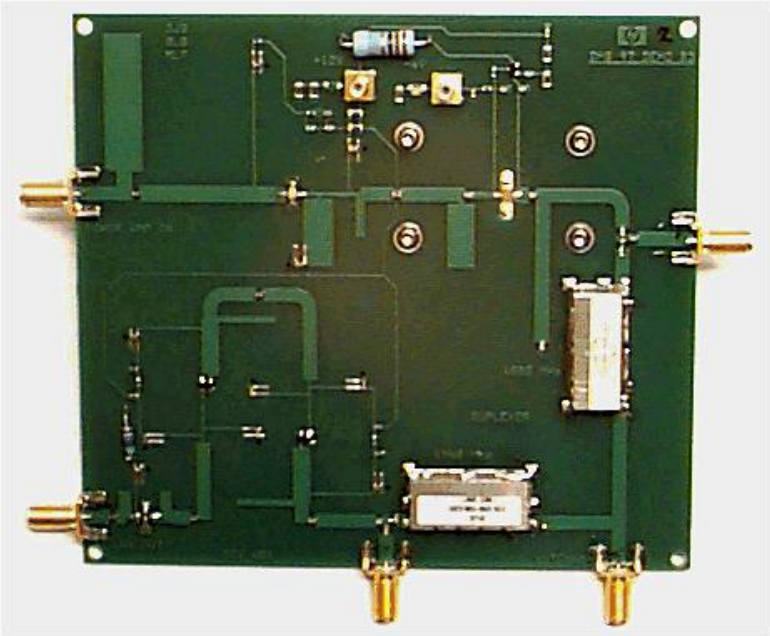

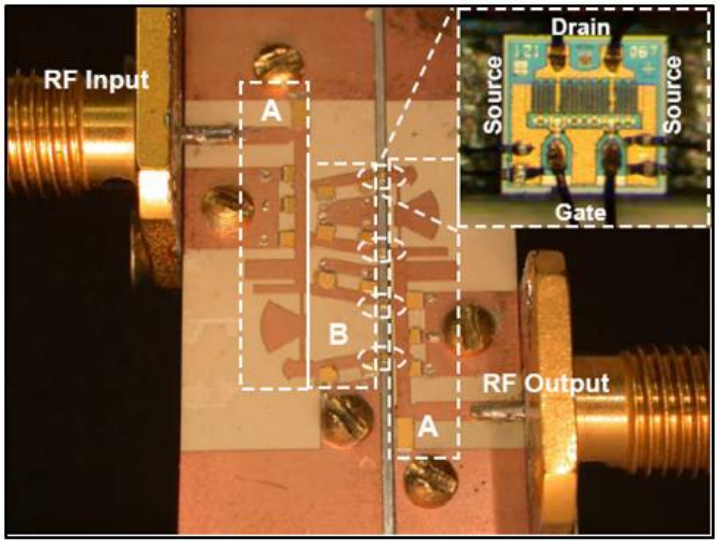

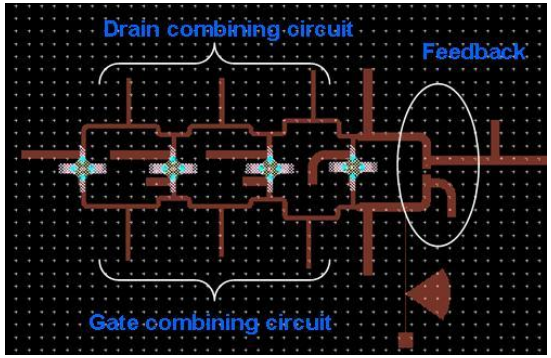

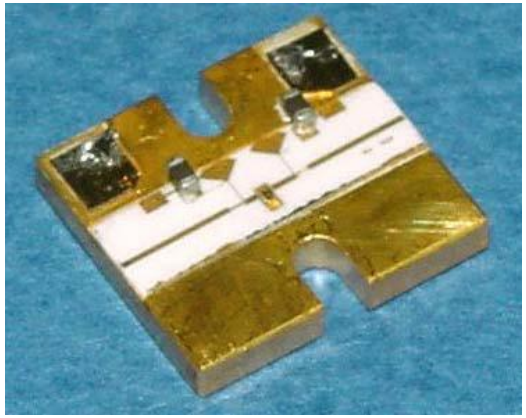

Microwave Amplifiers

Microwave Amplifiers

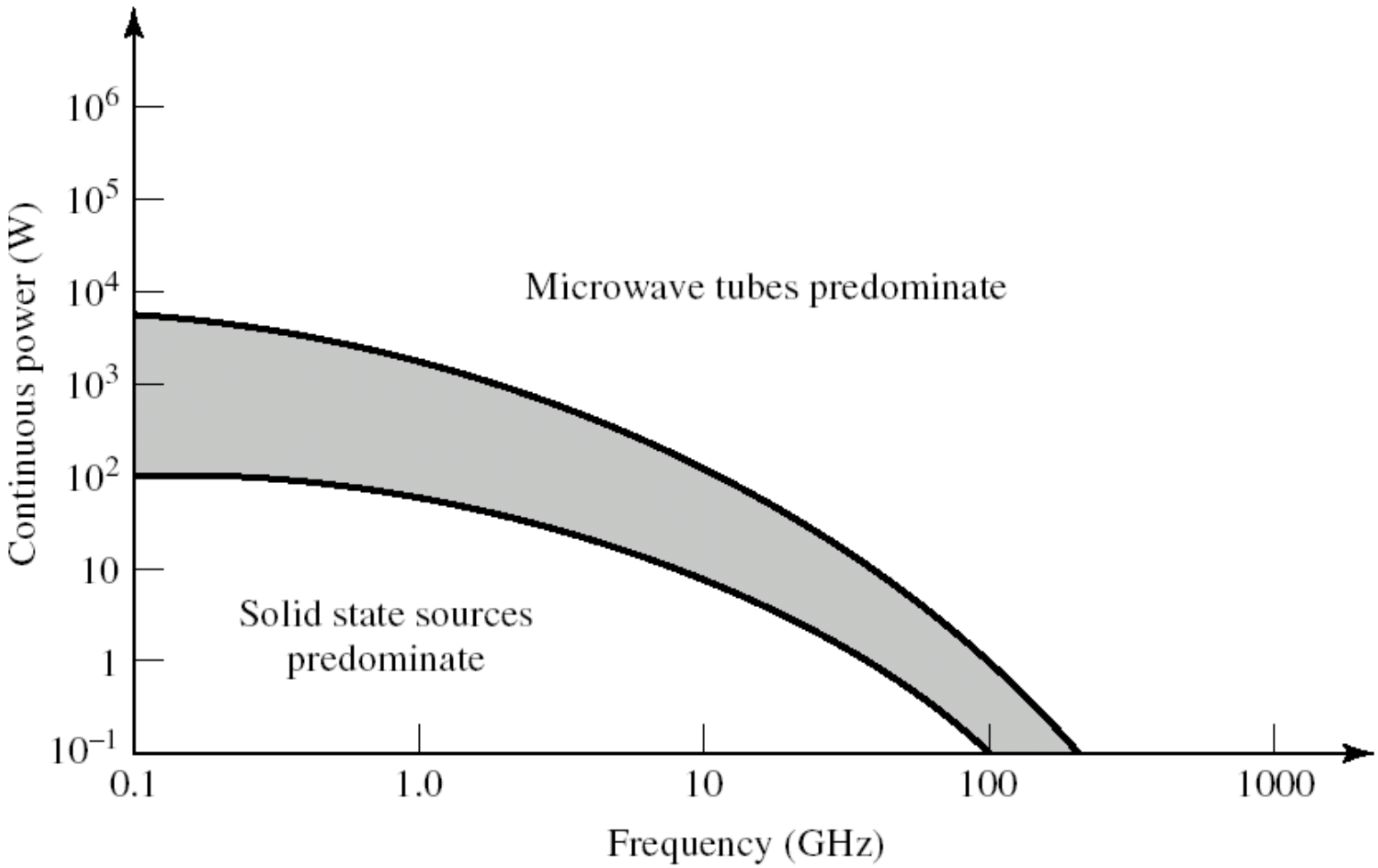

S parameters for transistors

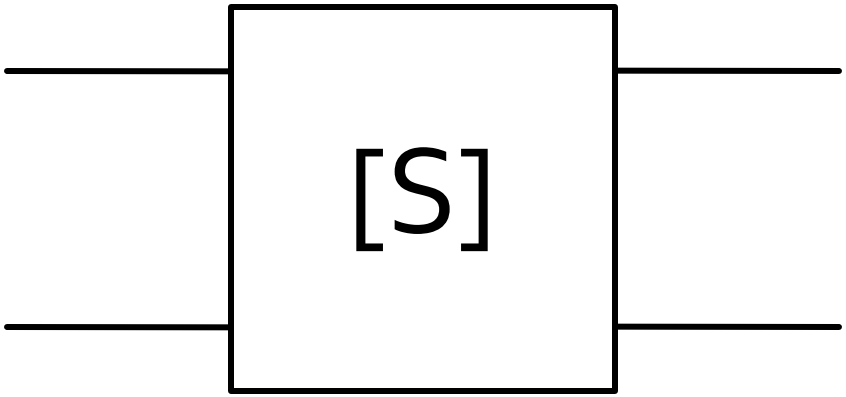

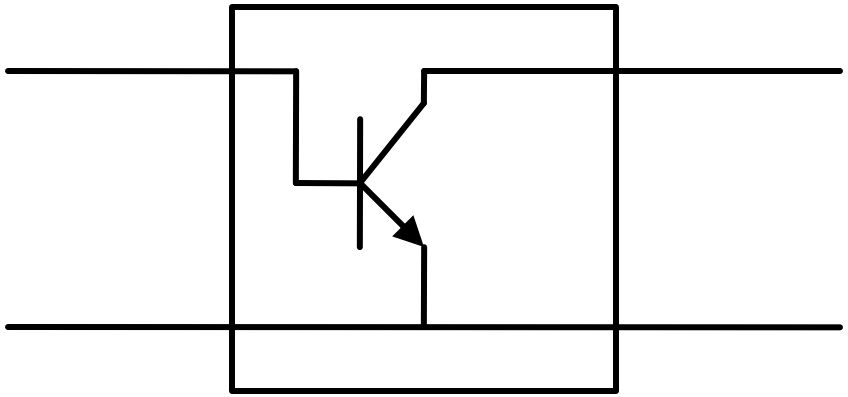

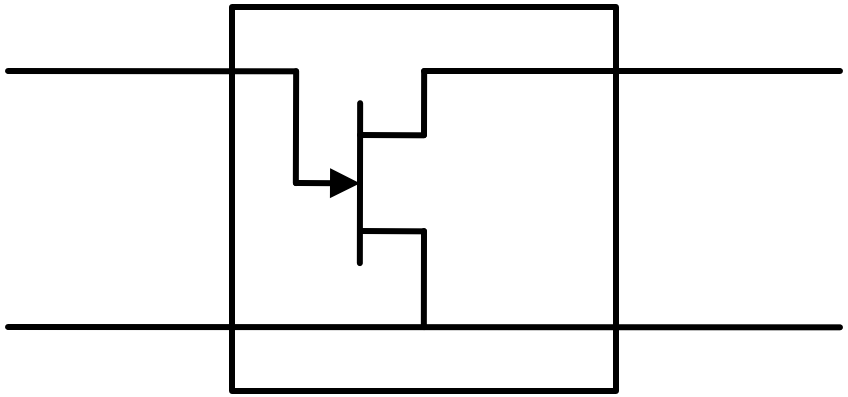

Amplifier as two-port

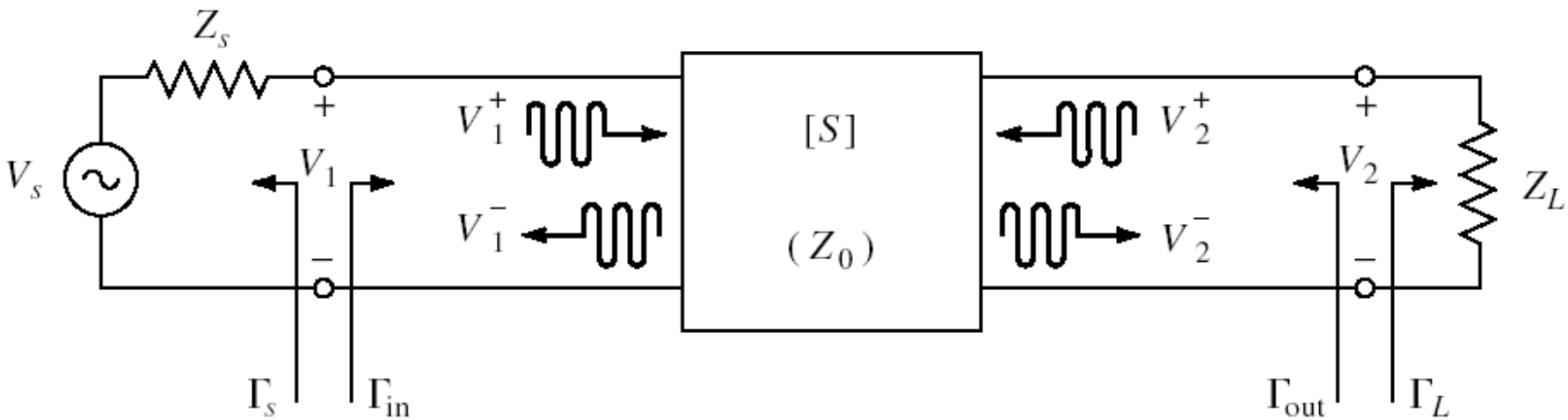

- Charaterized with S parameters
- normalized at Zo (implicit 50Ω)
- Datasheets: S parameters for specific bias conditions

Datasheets

NE46100

V_{CE} = 5 V, I_C = 50 mA

FREQUENCY	S_{11}		S_{21}		S_{12}		S_{22}		K	MAG^2
(MHz)	MAG	ANG	MAG	ANG	MAG	ANG	MAG	ANG		(dB)
100	0.778	-137	26.776	114	0.028	30	0.555	-102	0.16	29.8
200	0.815	-159	14.407	100	0.035	29	0.434	-135	0.36	26.2
500	0.826	-177	5.855	84	0.040	38	0.400	-162	0.75	21.7
800	0.827	176	3.682	76	0.052	43	0.402	-169	0.91	18.5
1000	0.826	173	2.963	71	0.058	47	0.405	-172	1.02	16.3
1200	0.825	170	2.441	66	0.064	47	0.412	-174	1.08	14.0
1400	0.820	167	2.111	61	0.069	47	0.413	-176	1.17	12.4
1600	0.828	165	1.863	57	0.078	54	0.426	-177	1.15	11.4
1800	0.827	162	1.671	53	0.087	50	0.432	-178	1.14	10.6
2000	0.828	159	1.484	49	0.093	50	0.431	-180	1.17	9.5
2500	0.822	153	1.218	39	0.11	48	0.462	177	1.18	7.8
3000	0.818	148	1.010	30	0.135	46	0.490	174	1.16	6.3
3500	0.824	142	0.876	21	0.147	44	0.507	170	1.16	5.3
4000	0.812	137	0.762	13	0.168	38	0.535	167	1.14	4.3

V_{CE} = 5 V, I_C = 100 mA

100	0.778	-144	27.669	111	0.027	35	0.523	-114	0.27	30.2
200	0.820	-164	14.559	97	0.029	29	0.445	-144	0.42	27.0
500	0.832	-179	5.885	84	0.035	38	0.435	-166	0.81	22.2
800	0.833	175	3.691	76	0.048	45	0.435	-173	0.95	18.8
1000	0.831	172	2.980	71	0.056	51	0.437	-176	1.05	16.0
1200	0.836	169	2.464	67	0.061	52	0.432	-178	1.11	14.0
1400	0.829	166	2.121	61	0.072	53	0.447	-180	1.12	12.6
1600	0.831	164	1.867	58	0.080	54	0.445	179	1.14	11.4

S2P - Touchstone

- Touchstone file format (*.s2p)

```
! SIEMENS Small Signal Semiconductors
! VDS = 3.5 V     ID = 15 mA
# GHz  S  MA  R  50
!  f        S11          S21          S12          S22
! GHz     MAG   ANG     MAG   ANG     MAG   ANG     MAG   ANG
 1.000 0.9800  -18.0   2.230  157.0  0.0240   74.0  0.6900  -15.0
 2.000 0.9500  -39.0   2.220  136.0  0.0450   57.0  0.6600  -30.0
 3.000 0.8900  -64.0   2.210  110.0  0.0680   40.0  0.6100  -45.0
 4.000 0.8200  -89.0   2.230   86.0  0.0850   23.0  0.5600  -62.0
 5.000 0.7400 -115.0   2.190   61.0  0.0990    7.0  0.4900  -80.0
 6.000 0.6500 -142.0   2.110   36.0  0.1070  -10.0  0.4100  -98.0
!
!  f      Fmin   Gammaopt  rn/50
! GHz      dB    MAG  ANG    -
 2.000     1.00  0.72   27   0.84
 4.000     1.40  0.64   61   0.58
```

Amplifier as two-port

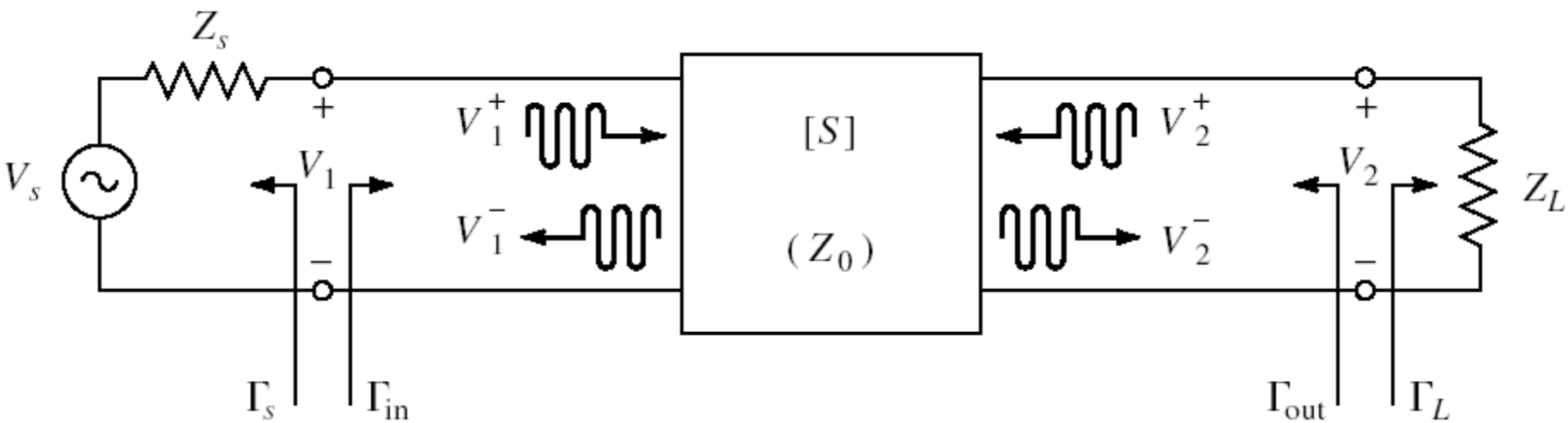

$$\Gamma_L = \frac{Z_L - Z_0}{Z_L + Z_0} \qquad \Gamma_S = \frac{Z_S - Z_0}{Z_S + Z_0} \qquad \begin{bmatrix} V_1^- \\ V_2^- \end{bmatrix} = \begin{bmatrix} S_{11} & S_{12} \\ S_{21} & S_{22} \end{bmatrix} \cdot \begin{bmatrix} V_1^+ \\ V_2^+ \end{bmatrix}$$

$$\Gamma_L = \frac{V_2^+}{V_2^-}$$

$$V_1^- = S_{11} \cdot V_1^+ + S_{12} \cdot V_2^+ = S_{11} \cdot V_1^+ + S_{12} \cdot \Gamma_L \cdot V_2^-$$

$$V_2^- = S_{21} \cdot V_1^+ + S_{22} \cdot V_2^+ = S_{21} \cdot V_1^+ + S_{22} \cdot \Gamma_L \cdot V_2^-$$

Amplifier as two-port

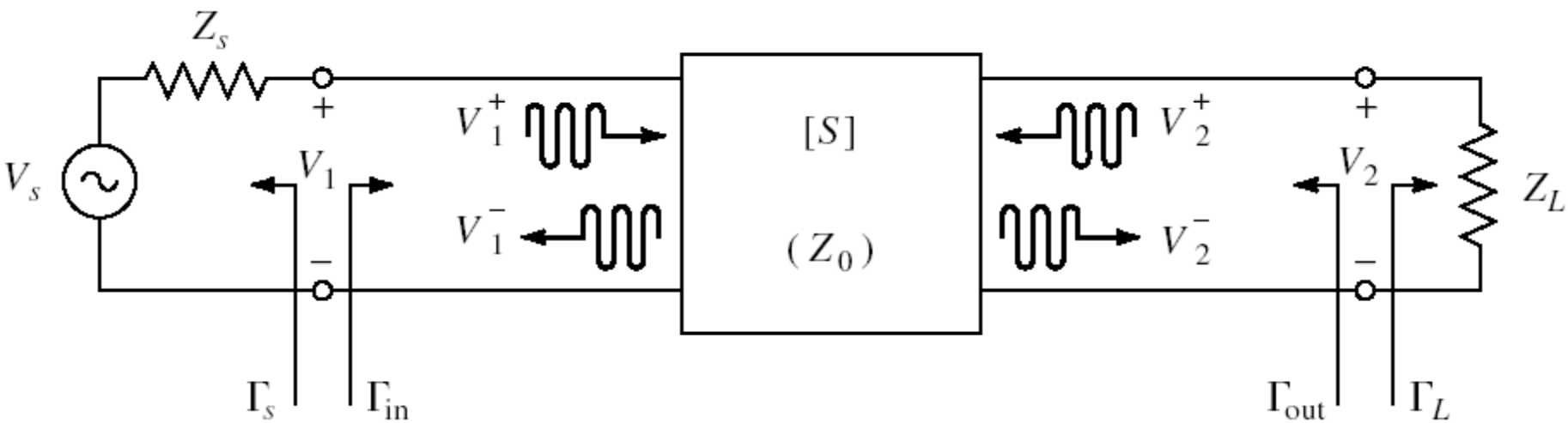

$$V_1^- = S_{11} \cdot V_1^+ + S_{12} \cdot V_2^+ = S_{11} \cdot V_1^+ + S_{12} \cdot \Gamma_L \cdot V_2^-$$

$$V_2^- = S_{21} \cdot V_1^+ + S_{22} \cdot V_2^+ = S_{21} \cdot V_1^+ + S_{22} \cdot \Gamma_L \cdot V_2^-$$

- similarly

$$\Gamma_{in} = \frac{V_1^-}{V_1^+} = S_{11} + \frac{S_{12} \cdot S_{21} \cdot \Gamma_L}{1 - S_{22} \cdot \Gamma_L}$$

$$\Gamma_{out} = \frac{V_2^-}{V_2^+} = S_{22} + \frac{S_{12} \cdot S_{21} \cdot \Gamma_S}{1 - S_{11} \cdot \Gamma_S}$$

Amplifier as two-port

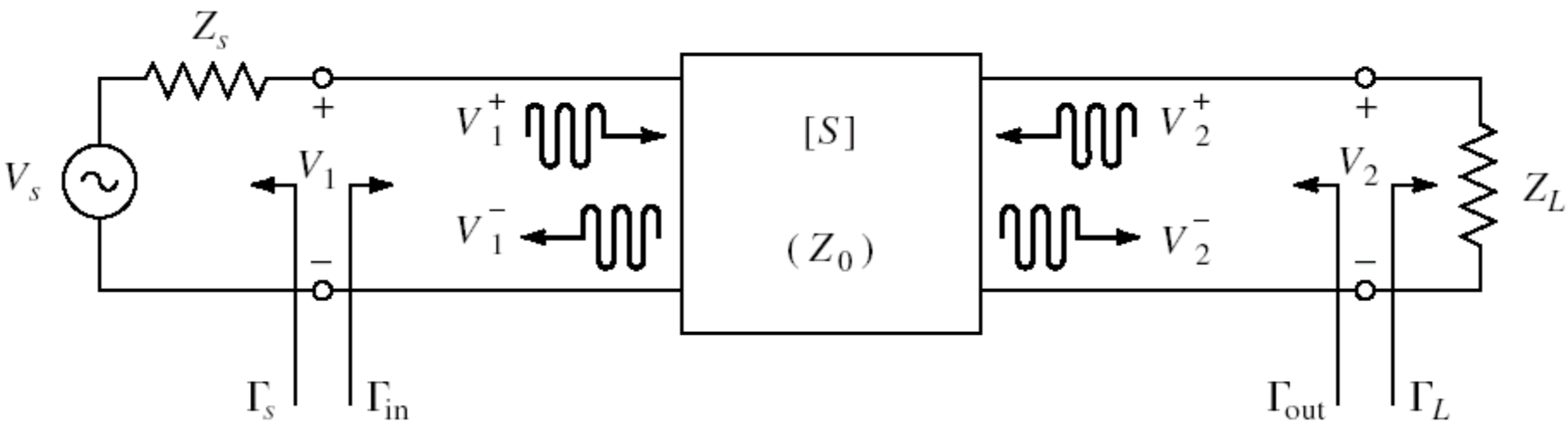

$$\Gamma_{in} = \frac{V_1^-}{V_1^+} = S_{11} + \frac{S_{12} \cdot S_{21} \cdot \Gamma_L}{1 - S_{22} \cdot \Gamma_L}$$

$$\Gamma_{out} = \frac{V_2^-}{V_2^+} = S_{22} + \frac{S_{12} \cdot S_{21} \cdot \Gamma_S}{1 - S_{11} \cdot \Gamma_S}$$

Power / Matching

- Two ports in which matching influences the power transfer

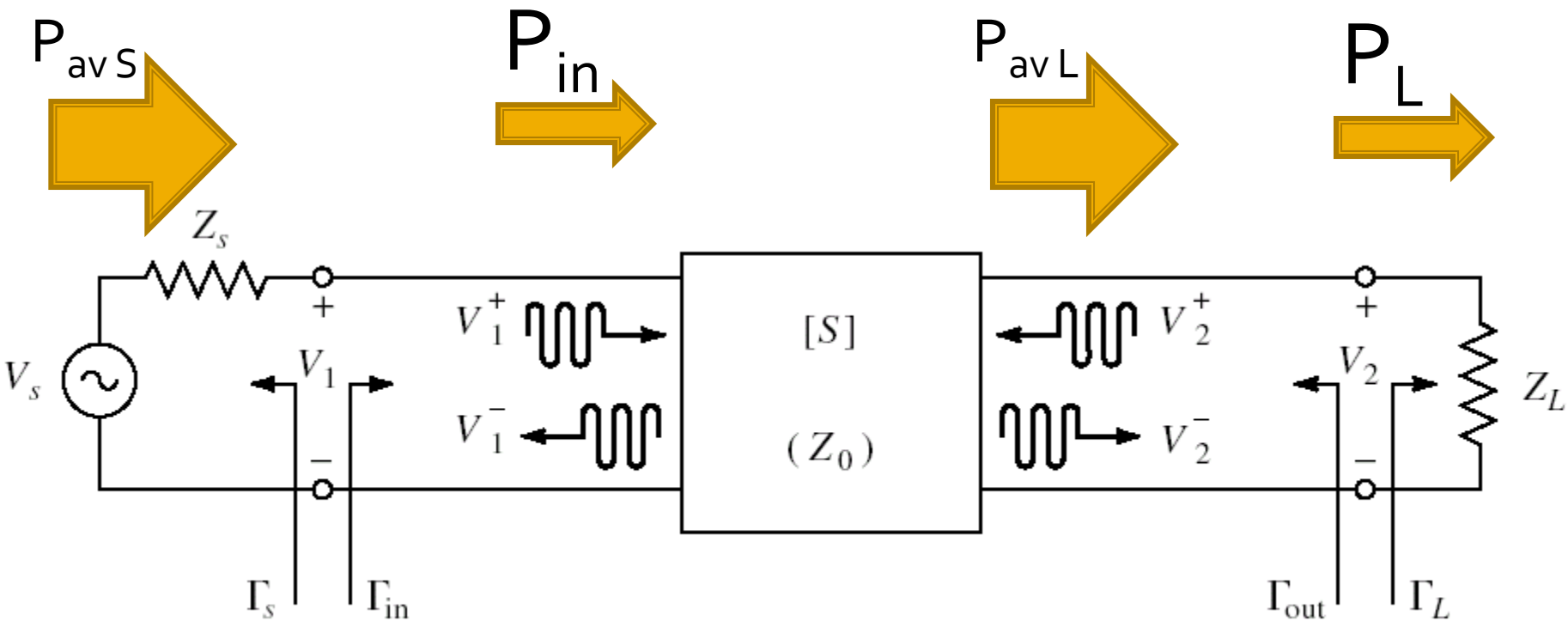

Signal power

$$\Gamma_{in} = \frac{V_1^-}{V_1^+} = S_{11} + \frac{S_{12} \cdot S_{21} \cdot \Gamma_L}{1 - S_{22} \cdot \Gamma_L}$$

$$\Gamma_{in} = \frac{Z_{in} - Z_0}{Z_{in} + Z_0}$$

$$V_1 = \frac{V_S \cdot Z_{in}}{Z_S + Z_{in}} = V_1^+ + V_1^- = V_1^+ \cdot (1 + \Gamma_{in})$$

$$V_1^+ = \frac{V_S}{2} \frac{(1 - \Gamma_S)}{(1 - \Gamma_S \cdot \Gamma_{in})}$$

- L2

$$P_{in} = \frac{1}{2 \cdot Z_0} \cdot \left|V_1^+\right|^2 \cdot \left(1 - \left|\Gamma_{in}\right|^2\right)$$

$$P_L = \frac{1}{2 \cdot Z_0} \cdot \left|V_2^-\right|^2 \cdot \left(1 - \left|\Gamma_L\right|^2\right)$$

$$P_{in} = \frac{\left|V_S\right|^2}{8 \cdot Z_0} \cdot \frac{\left|1 - \Gamma_S\right|^2}{\left|1 - \Gamma_S \cdot \Gamma_{in}\right|^2} \left(1 - \left|\Gamma_{in}\right|^2\right)$$

$$V_2^- = S_{21} \cdot V_1^+ + S_{22} \cdot V_2^+ = S_{21} \cdot V_1^+ + S_{22} \cdot \Gamma_L \cdot V_2^-$$

$$V_2^- = \frac{S_{21} \cdot V_1^+}{1 - S_{22} \cdot \Gamma_L}$$

$$P_L = \frac{\left|V_1^+\right|^2}{2 \cdot Z_0} \cdot \frac{\left|S_{21}\right|^2}{\left|1 - S_{22} \cdot \Gamma_L\right|^2} \left(1 - \left|\Gamma_L\right|^2\right)$$

$$P_L = \frac{\left|V_S\right|^2}{8 \cdot Z_0} \cdot \frac{\left|S_{21}\right|^2 \cdot \left(1 - \left|\Gamma_L\right|^2\right)}{\left|1 - S_{22} \cdot \Gamma_L\right|^2} \cdot \frac{\left|1 - \Gamma_S\right|^2}{\left|1 - \Gamma_S \cdot \Gamma_{in}\right|^2}$$

Signal power

- Signal power

$$P_{in} = \frac{|V_S|^2}{8 \cdot Z_0} \cdot \frac{|1-\Gamma_S|^2}{|1-\Gamma_S \cdot \Gamma_{in}|^2}\left(1-|\Gamma_{in}|^2\right)$$

$$P_L = \frac{|V_S|^2}{8 \cdot Z_0} \cdot \frac{|S_{21}|^2 \cdot \left(1-|\Gamma_L|^2\right)}{|1-S_{22} \cdot \Gamma_L|^2} \cdot \frac{|1-\Gamma_S|^2}{|1-\Gamma_S \cdot \Gamma_{in}|^2}$$

- Power available from the source

$$P_{av\,S} = P_{in}\big|_{\Gamma_{in}=\Gamma_S^*} = \frac{|V_S|^2}{8 \cdot Z_0} \cdot \frac{|1-\Gamma_S|^2}{\left(1-|\Gamma_S|^2\right)}$$

- Power available on the load (from the network)

$$P_{av\,L} = P_L\big|_{\Gamma_L=\Gamma_{out}^*} = \frac{|V_S|^2}{8 \cdot Z_0} \cdot \frac{|S_{21}|^2 \cdot |1-\Gamma_S|^2}{|1-S_{11} \cdot \Gamma_S|^2 \cdot \left(1-|\Gamma_{out}|^2\right)}$$

Two-Port Power Gains

- Power Gain

$$G = \frac{P_L}{P_{in}} = \frac{|S_{21}|^2 \cdot \left(1 - |\Gamma_L|^2\right)}{\left(1 - |\Gamma_{in}|^2\right) \cdot |1 - S_{22} \cdot \Gamma_L|^2}$$

$$P_{in} = P_{in}\left(\Gamma_S, \Gamma_{in}(\Gamma_L), S\right)$$

$$P_L = P_L\left(\Gamma_S, \Gamma_{in}(\Gamma_L), S\right)$$

- The **actual** power gain **introduced** by the amplifier is less important because a higher gain may be accompanied by a **decrease** in input power (power actually drained from the source)
- We prefer to characterize the amplifier effect looking to the **power actually delivered to the load** in relation to the power **available from the source** (which is a constant)

Two-Port Power Gains

- **Available** power gain

$$G_A = \frac{P_{av\,L}}{P_{av\,S}} = \frac{|S_{21}|^2 \cdot \left(1-|\Gamma_S|^2\right)}{|1-S_{22}\cdot\Gamma_L|^2 \cdot \left(1-|\Gamma_{out}|^2\right)}$$

- **Transducer** power gain

$$G_T = \frac{P_L}{P_{av\,S}} = \frac{|S_{21}|^2 \cdot \left(1-|\Gamma_S|^2\right)\cdot\left(1-|\Gamma_L|^2\right)}{|1-\Gamma_S\cdot\Gamma_{in}|^2 \cdot |1-S_{22}\cdot\Gamma_L|^2}$$

$$\Gamma_{in} = \Gamma_{in}(\Gamma_L)$$

- **Unilateral transducer** power gain

$$G_{TU} = |S_{21}|^2 \cdot \frac{1-|\Gamma_S|^2}{|1-S_{11}\cdot\Gamma_S|^2} \cdot \frac{1-|\Gamma_L|^2}{|1-S_{22}\cdot\Gamma_L|^2}$$

$$\boxed{S_{12} \cong 0}$$

$$\Gamma_{in} = S_{11}$$

Input and output can be treated independently

Amplifier as two-port

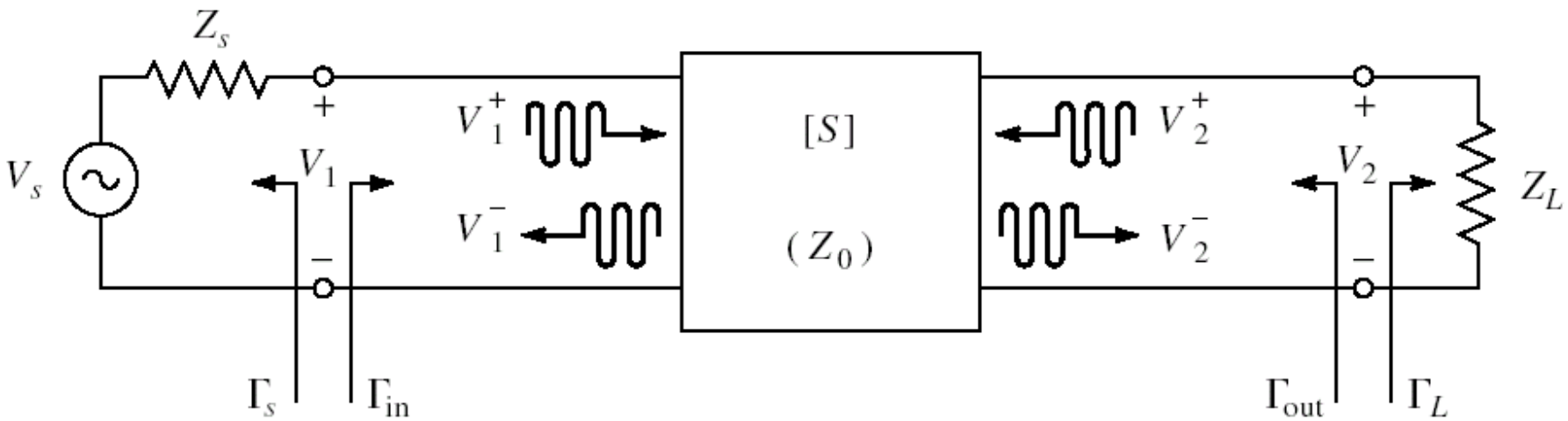

- For an amplifier two-port we are interested in:
  - stability
  - power gain
  - noise (sometimes – small signals)
  - linearity (sometimes – large signals)

Microwave Amplifiers

Stability

Amplifier as two-port

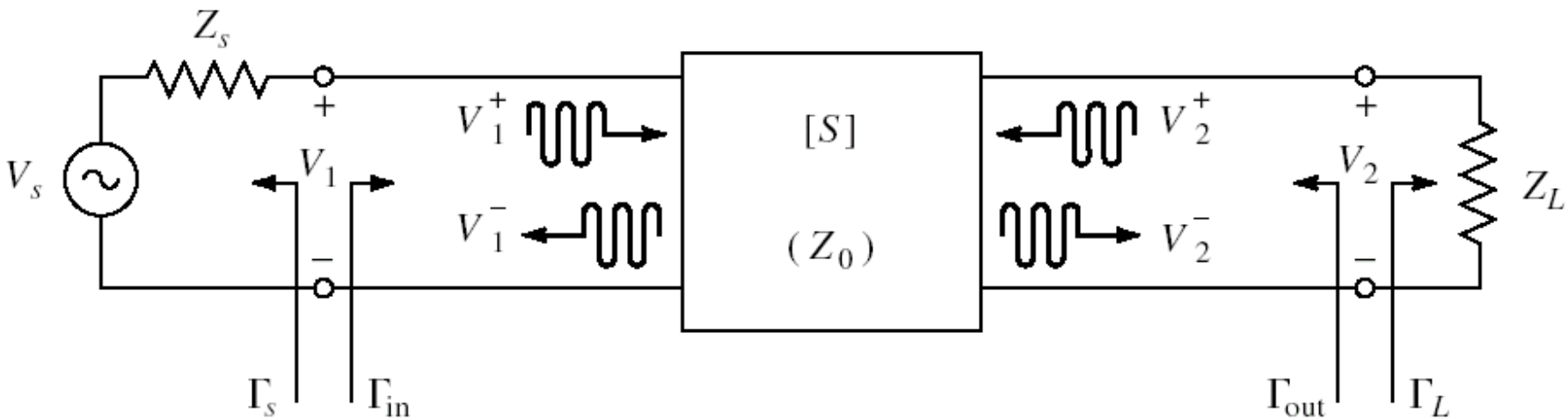

- For an amplifier two-port we are interested in:
  - **stability**
  - power gain
  - noise (sometimes – small signals)
  - linearity (sometimes – large signals)

Stability

- L6 $\Gamma = \Gamma_r + j \cdot \Gamma_i$ $r_L = \dfrac{1-\Gamma_r^2-\Gamma_i^2}{(1-\Gamma_r)^2+\Gamma_i^2}$

  Z_{in} $\Gamma_{in} = \Gamma_r + j \cdot \Gamma_i$

- instability

  $\mathrm{Re}\{Z_{in}\} < 0 \Leftrightarrow 1-\Gamma_r^2-\Gamma_i^2 < 0$ $\Gamma_r^2+\Gamma_i^2 > 1$ $|\Gamma_{in}| > 1$

- stability, Z_{in}
  - conditions to be met by Γ_L to achieve (input) stability

    $|\Gamma_{in}| < 1$ $\left| S_{11} + \dfrac{S_{12} \cdot S_{21} \cdot \Gamma_L}{1 - S_{22} \cdot \Gamma_L} \right| < 1$

- similarly Z_{out}
  - conditions to be met by Γ_S to achieve (output) stability

Stability

$$|\Gamma_{in}| < 1 \qquad \left| S_{11} + \frac{S_{12} \cdot S_{21} \cdot \Gamma_L}{1 - S_{22} \cdot \Gamma_L} \right| < 1$$

- We can calculate conditions to be met by Γ_L to achieve stability

$$|\Gamma_{out}| < 1 \qquad \left| S_{22} + \frac{S_{12} \cdot S_{21} \cdot \Gamma_S}{1 - S_{11} \cdot \Gamma_S} \right| < 1$$

- We can calculate conditions to be met by Γ_S to achieve stability

Stability

$$|\Gamma_{in}| < 1 \qquad \left| S_{11} + \frac{S_{12} \cdot S_{21} \cdot \Gamma_L}{1 - S_{22} \cdot \Gamma_L} \right| < 1$$

- The limit between stability/instability

$$|\Gamma_{in}| = 1 \qquad \left| S_{11} + \frac{S_{12} \cdot S_{21} \cdot \Gamma_L}{1 - S_{22} \cdot \Gamma_L} \right| = 1$$

$$\left| S_{11} \cdot (1 - S_{22} \cdot \Gamma_L) + S_{12} \cdot S_{21} \cdot \Gamma_L \right| = \left| 1 - S_{22} \cdot \Gamma_L \right|$$

- determinant of the S matrix $\Delta = S_{11} \cdot S_{22} - S_{12} \cdot S_{21}$

$$\left| S_{11} - \Delta \cdot \Gamma_L \right| = \left| 1 - S_{22} \cdot \Gamma_L \right|$$

$$\left| S_{11} - \Delta \cdot \Gamma_L \right|^2 = \left| 1 - S_{22} \cdot \Gamma_L \right|^2$$

Stability

$$\left|S_{11}-\Delta\cdot\Gamma_L\right|^2=\left|1-S_{22}\cdot\Gamma_L\right|^2$$

$$a\cdot a^*=|a|\cdot e^{j\theta}\cdot|a|\cdot e^{-j\theta}=|a|^2$$

$$|a+b|^2=(a+b)\cdot(a+b)^*=(a+b)\cdot\left(a^*+b^*\right)=\underline{|a|^2}+|b|^2+\underline{a^*\cdot b}+\underline{a\cdot b^*}$$

$$|S_{11}|^2+|\Delta|^2\cdot|\Gamma_L|^2-\left(\Delta\cdot\Gamma_L\cdot S_{11}^*+\Delta^*\cdot\Gamma_L^*\cdot S_{11}\right)=1+|S_{22}|^2\cdot|\Gamma_L|^2-\left(S_{22}^*\cdot\Gamma_L^*+S_{22}\cdot\Gamma_L\right)$$

$$\left(|S_{22}|^2-|\Delta|^2\right)\cdot\Gamma_L\cdot\Gamma_L^*-\left(S_{22}-\Delta\cdot S_{11}^*\right)\cdot\Gamma_L-\left(S_{22}^*-\Delta^*\cdot S_{11}\right)\cdot\Gamma_L^*=|S_{11}|^2-1$$

$$\Gamma_L\cdot\Gamma_L^*-\frac{\left(S_{22}-\Delta\cdot S_{11}^*\right)\cdot\Gamma_L+\left(S_{22}^*-\Delta^*\cdot S_{11}\right)\cdot\Gamma_L^*}{|S_{22}|^2-|\Delta|^2}=\frac{|S_{11}|^2-1}{|S_{22}|^2-|\Delta|^2}\qquad\Big/+\frac{\left|S_{22}-\Delta\cdot S_{11}^*\right|^2}{\left(|S_{22}|^2-|\Delta|^2\right)^2}$$

$$\left|\Gamma_L-\frac{\left(S_{22}-\Delta\cdot S_{11}^*\right)^*}{|S_{22}|^2-|\Delta|^2}\right|^2=\frac{|S_{11}|^2-1}{|S_{22}|^2-|\Delta|^2}+\frac{\left|S_{22}-\Delta\cdot S_{11}^*\right|^2}{\left(|S_{22}|^2-|\Delta|^2\right)^2}$$

Stability

$$\left|\Gamma_L - \frac{\left(S_{22} - \Delta \cdot S_{11}^*\right)^*}{\left|S_{22}\right|^2 - \left|\Delta\right|^2}\right| = \left|\frac{S_{12} \cdot S_{21}}{\left|S_{22}\right|^2 - \left|\Delta\right|^2}\right|$$

$$\left(x - x_0\right)^2 + \left(y - y_0\right)^2 = R^2$$

$$\left|\Gamma - \Gamma_0\right| = R$$

$$\boxed{\left|\Gamma - \Gamma_0\right| = R}$$

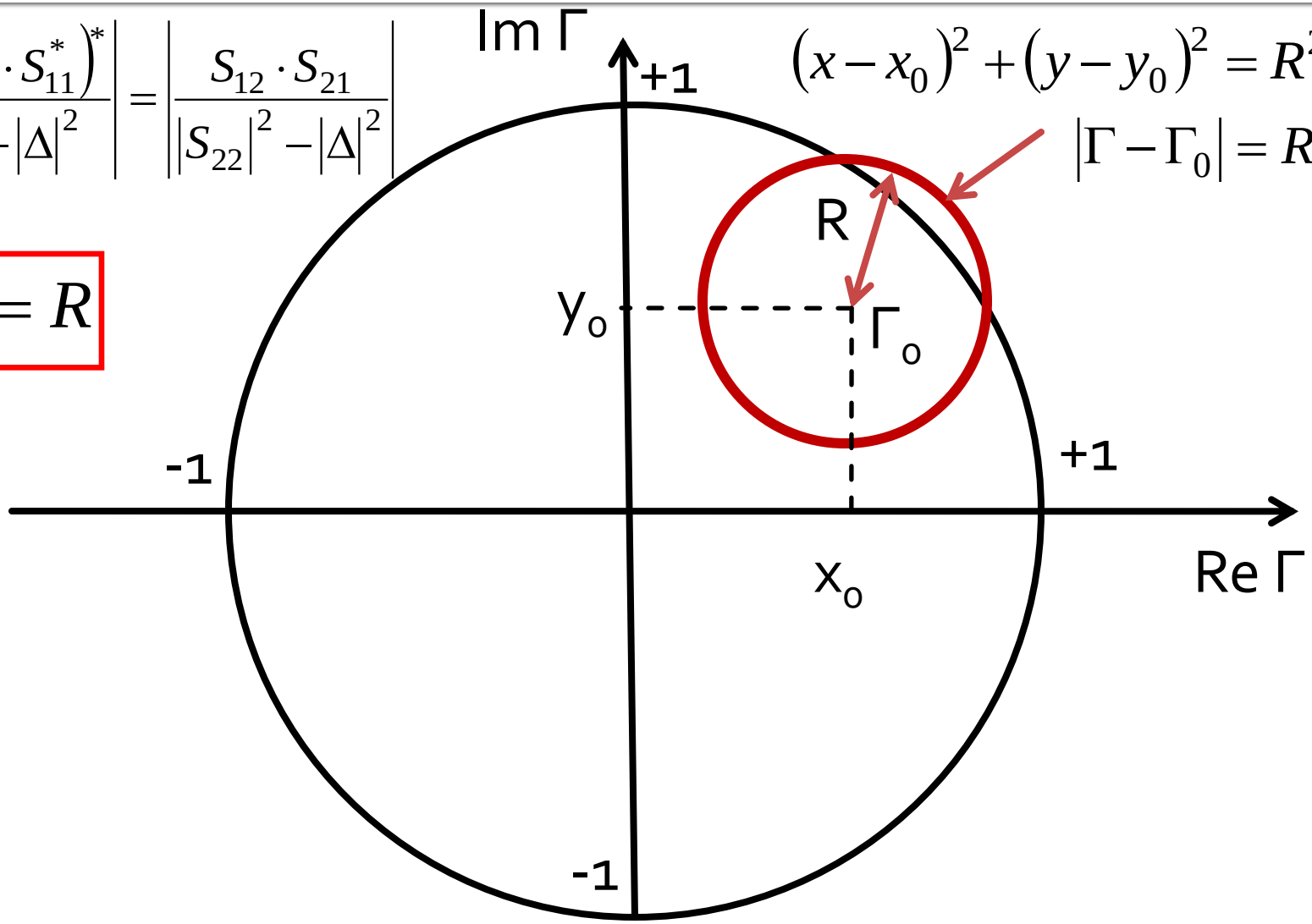

Output stability circle (CSOUT)

$$\left|\Gamma_L - \frac{\left(S_{22} - \Delta \cdot S_{11}^*\right)^*}{|S_{22}|^2 - |\Delta|^2}\right| = \left|\frac{S_{12} \cdot S_{21}}{|S_{22}|^2 - |\Delta|^2}\right| \qquad |\Gamma_L - C_L| = R_L$$

- We obtain the equation of a circle in the complex plane, which represents the locus of Γ_L for the **limit between stability and instability** ($|\Gamma_{in}| = 1$)
- This circle is the **output stability circle** (Γ_L)

$$C_L = \frac{\left(S_{22} - \Delta \cdot S_{11}^*\right)^*}{|S_{22}|^2 - |\Delta|^2} \qquad R_L = \frac{|S_{12} \cdot S_{21}|}{\left||S_{22}|^2 - |\Delta|^2\right|}$$

Input stability circle (CSIN)

- Similarly

$$|\Gamma_{out}| = 1 \qquad \left| S_{22} + \frac{S_{12} \cdot S_{21} \cdot \Gamma_S}{1 - S_{11} \cdot \Gamma_S} \right| = 1$$

- We obtain the equation of a circle in the complex plane, which represents the locus of Γ_S for the **limit between stability and instability** ($|\Gamma_{out}| = 1$)
- This circle is the **input stability circle** (Γ_S)

$$C_S = \frac{\left(S_{11} - \Delta \cdot S_{22}^*\right)^*}{|S_{11}|^2 - |\Delta|^2} \qquad R_S = \frac{|S_{12} \cdot S_{21}|}{\left||S_{11}|^2 - |\Delta|^2\right|}$$

Output stability circle (CSOUT)

- The **output stability circle** represents the locus of Γ_L for the **limit between stability and instability** ($|\Gamma_{in}| = 1$)
- The circle divides the complex planes in two areas, the **inside** and the **outside** of the circle
- The two areas will represent the locus of Γ_L for stability ($|\Gamma_{in}|<1$) / instability ($|\Gamma_{in}|>1$)

Output stability circle (CSOUT)

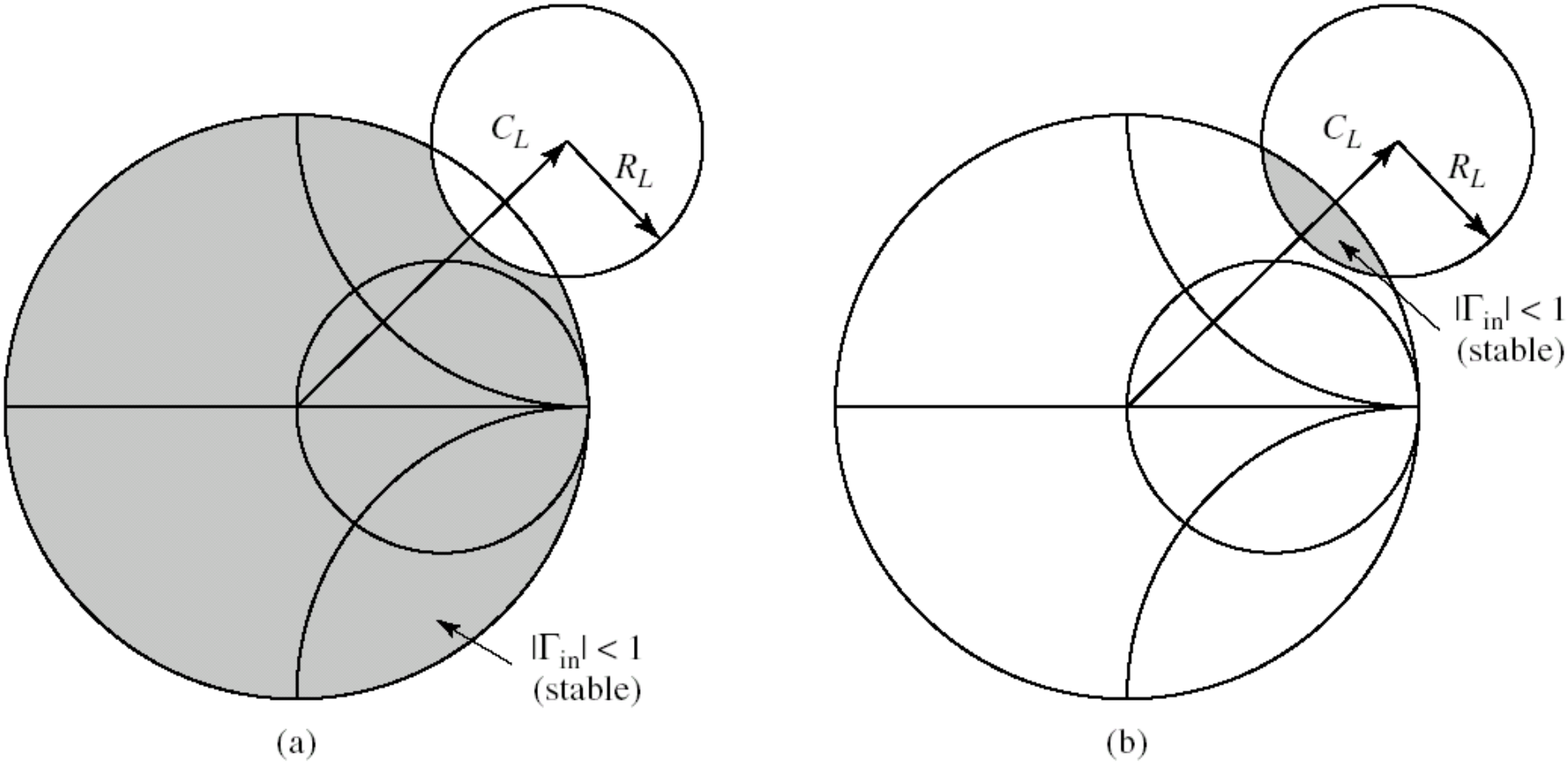

- Two cases possible: (a) stable outside/ (b) stable inside

Output stability circle (CSOUT)

- Identification of the stability / instability regions
  - The center of the Smith Chart in Γ_L complex plane corresponds to $\Gamma_L = 0$
  - Input reflection coefficient

$$\Gamma_{in} = S_{11} + \frac{S_{12} \cdot S_{21} \cdot \Gamma_L}{1 - S_{22} \cdot \Gamma_L} \qquad \Gamma_{in}\big|_{\Gamma_L = 0} = S_{11} \qquad \left|\Gamma_{in}\right|_{\Gamma_L = 0} = \left|S_{11}\right|$$

  - A decision can be made based on |S11| value and on the position of the center of the Smith chart (origin of the complex plane) relative to the circle

Identification of the stability / instability regions

- Output stability circle
  - **$|S_{11}| < 1$** → the center of the Smith chart on which Γ_L is represented is a **stable point**, so it's placed in the stability region (most often situation)
  - $|S_{11}| > 1$ → the center of the Smith chart on which Γ_L is represented is a **unstable point**, so it's placed in the instability region
- Input stability circle
  - **$|S_{22}| < 1$** → the center of the Smith chart on which Γ_S is represented is a **stable point**, so it's placed in the stability region (most often situation)
  - $|S_{22}| > 1$ → the center of the Smith chart on which Γ_S is represented is a **unstable point**, so it's placed in the instability region

Example

- ATF-34143 **at Vds=3V Id=20mA.**
- @5GHz
  - S11 = 0.64∠139°
  - S12 = 0.119∠-21°
  - S21 = 3.165 ∠16°
  - S22 = 0.22 ∠146°

```
!ATF-34143
!S-PARAMETERS at Vds=3V  Id=20mA.   LAST UPDATED 01-29-99

# ghz s ma r 50

2.0  0.75  -126  6.306  90  0.088  23  0.26  -120
2.5  0.72  -145  5.438  75  0.095  15  0.25  -140
3.0  0.69  -162  4.762  62  0.102  7  0.23  -156
4.0  0.65  166  3.806  38  0.111  -8  0.22  174
5.0  0.64  139  3.165  16  0.119  -21  0.22  146
6.0  0.65  114  2.706  -5  0.125  -35  0.23  118
7.0  0.66  89  2.326  -27  0.129  -49  0.25  91
8.0  0.69  67  2.017  -47  0.133  -62  0.29  67
9.0  0.72  48  1.758  -66  0.135  -75  0.34  46

!FREQ   Fopt    GAMMA OPT      RN/Zo
!GHZ    dB     MAG     ANG     -

2.0  0.19  0.71  66  0.09
2.5  0.23  0.65  83  0.07
3.0  0.29  0.59  102  0.06
4.0  0.42  0.51  138  0.03
5.0  0.54  0.45  174  0.03
6.0  0.67  0.42  -151  0.05
7.0  0.79  0.42  -118  0.10
8.0  0.92  0.45  -88  0.18
9.0  1.04  0.51  -63  0.30
10.0  1.16  0.61  -43  0.46
```

$$\begin{cases} S_{11} = 0.64\angle 139^\circ \\ S_{11} = 0.64 \cdot \cos 139^\circ + j \cdot 0.64 \cdot \sin 139^\circ \\ S_{11} = -0.4830 + j \cdot 0.4199 \end{cases}$$

Example

- ATF-34143
- **at**
  - **Vds=3V**
  - **Id=20mA**.

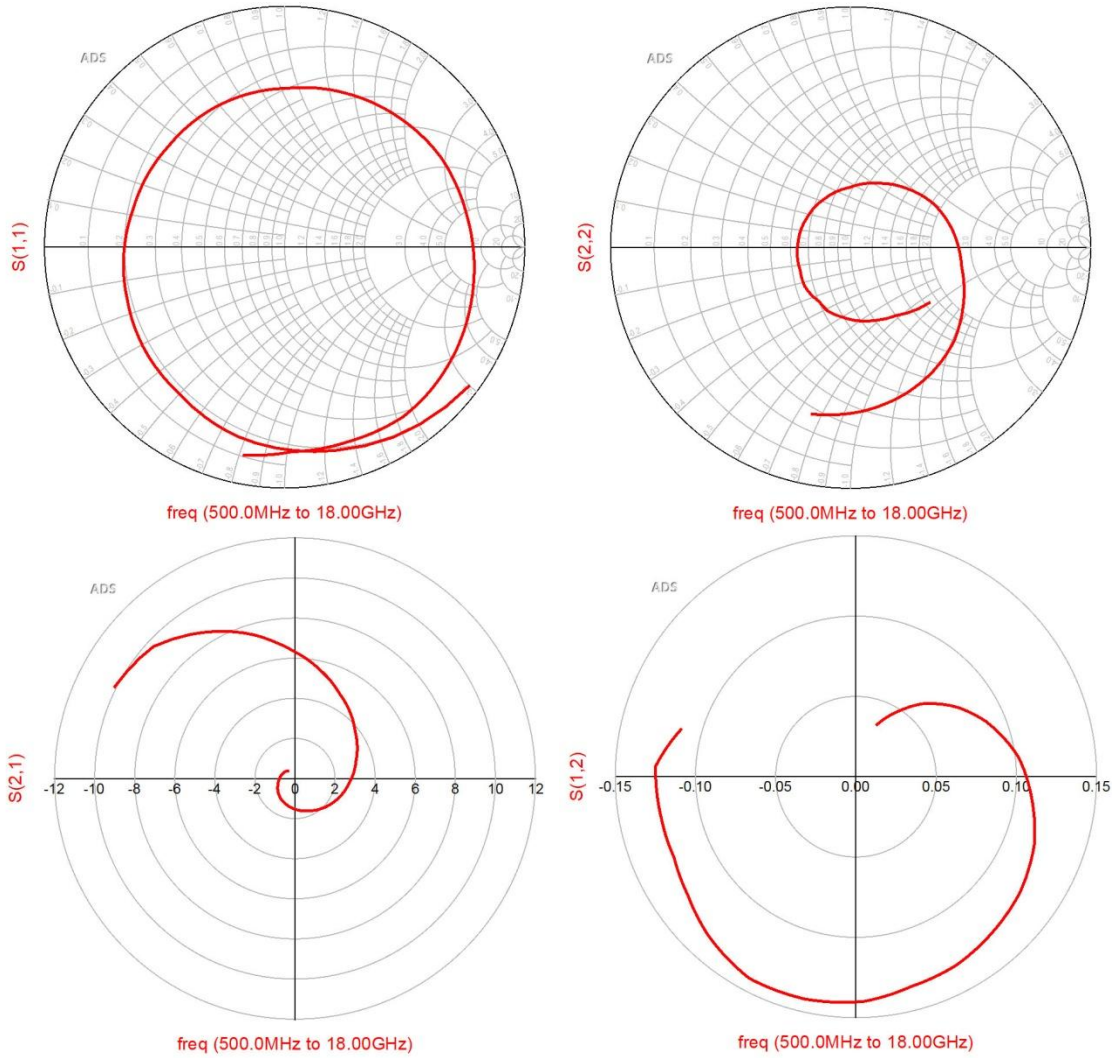

Solution + region identification

- S parameters
  - S11 = -0.483+0.42·j
  - S12 = 0.111-0.043·j
  - S21 = 3.042+0.872·j
  - S22 = -0.182+0.123·j
- | S11 | = 0.64 < 1
- $|C_L| < R_L$, $0 \in$ CSOUT
- The center of the Smith chart is placed inside the output stability circle ($0 \in$ CSOUT) and is a stable point (| S11 | < 1)
  - the inside of the output stability circle – stability region
  - the outside of the output stability circle – instability region

$$C_L = \frac{\left(S_{22} - \Delta \cdot S_{11}^*\right)^*}{|S_{22}|^2 - |\Delta|^2} = 3.931 - 0.897 \cdot j$$

$$|C_L| = 4.032$$

$$R_L = \frac{|S_{12} \cdot S_{21}|}{\left||S_{22}|^2 - |\Delta|^2\right|} = 4.891$$

Solution + region identification

- S parameters
  - S11 = -0.483+0.42·j
  - S12 = 0.111-0.043·j
  - S21 = 3.042+0.872·j
  - S22 = -0.182+0.123·j
- | S22 | = 0.22 < 1
- $|C_S| > R_S$, $0 \notin$ CSIN
- The center of the Smith chart is placed outside the input stability circle ($0 \notin$ CSIN) and is a stable point (| S22 | < 1)
  - the outside of the input stability circle – stability region
  - the inside of the input stability circle – instability region

$$C_S = \frac{\left(S_{11} - \Delta \cdot S_{22}^*\right)^*}{|S_{11}|^2 - |\Delta|^2} = -1.871 - 1.265 \cdot j$$

$$|C_S| = 2.259$$

$$R_S = \frac{|S_{12} \cdot S_{21}|}{\left||S_{11}|^2 - |\Delta|^2\right|} = 1.325$$

ADS

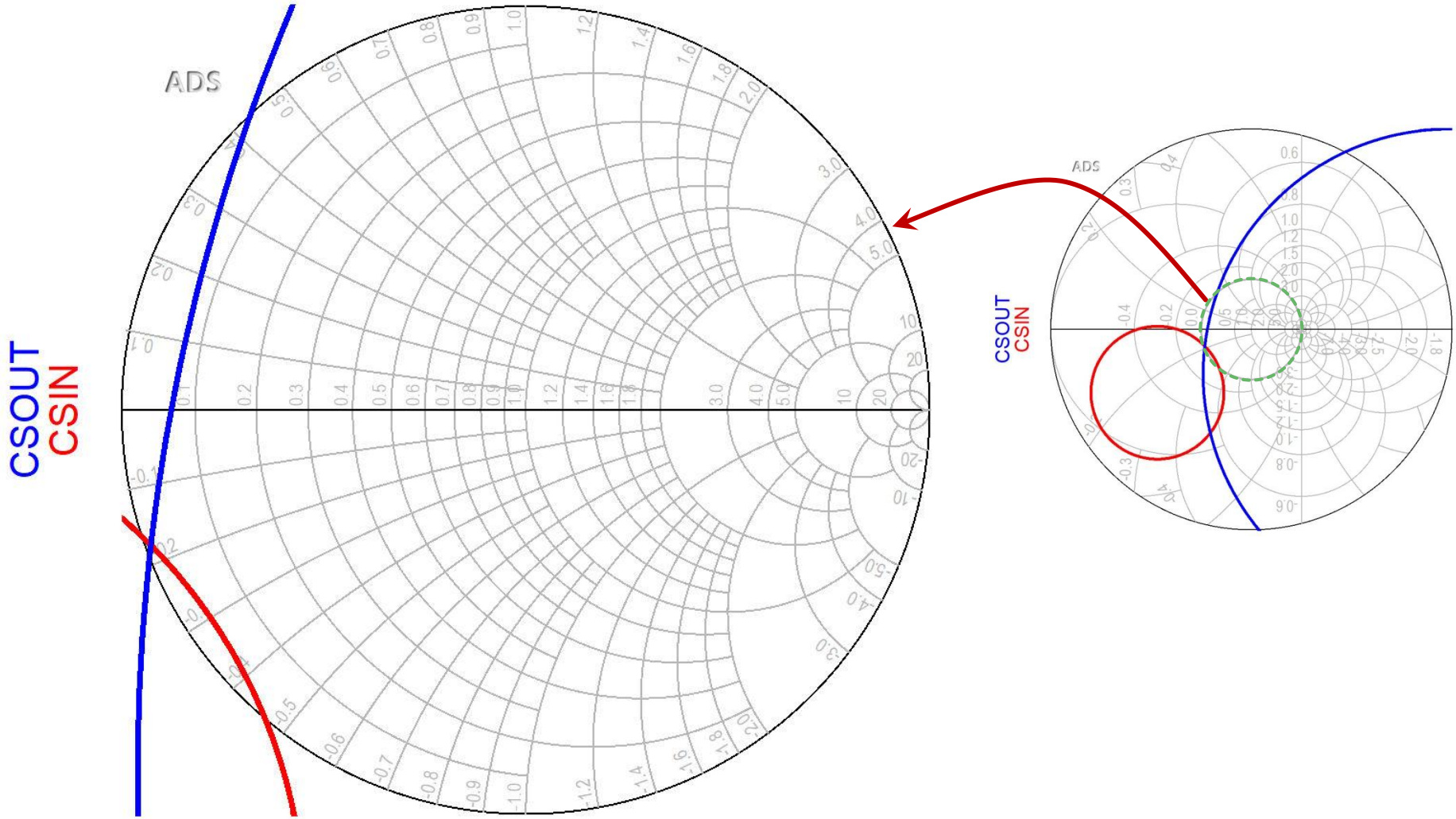

3D representation of $|\Gamma_{in}|$, $|\Gamma_{out}|$

- High variations -> we change to z logarithmic scale

$$\Gamma_{in}(\Gamma_L) = S_{11} + \frac{S_{12} \cdot S_{21} \cdot \Gamma_L}{1 - S_{22} \cdot \Gamma_L}$$

$$\Gamma_{out}(\Gamma_S) = S_{22} + \frac{S_{12} \cdot S_{21} \cdot \Gamma_S}{1 - S_{11} \cdot \Gamma_S}$$

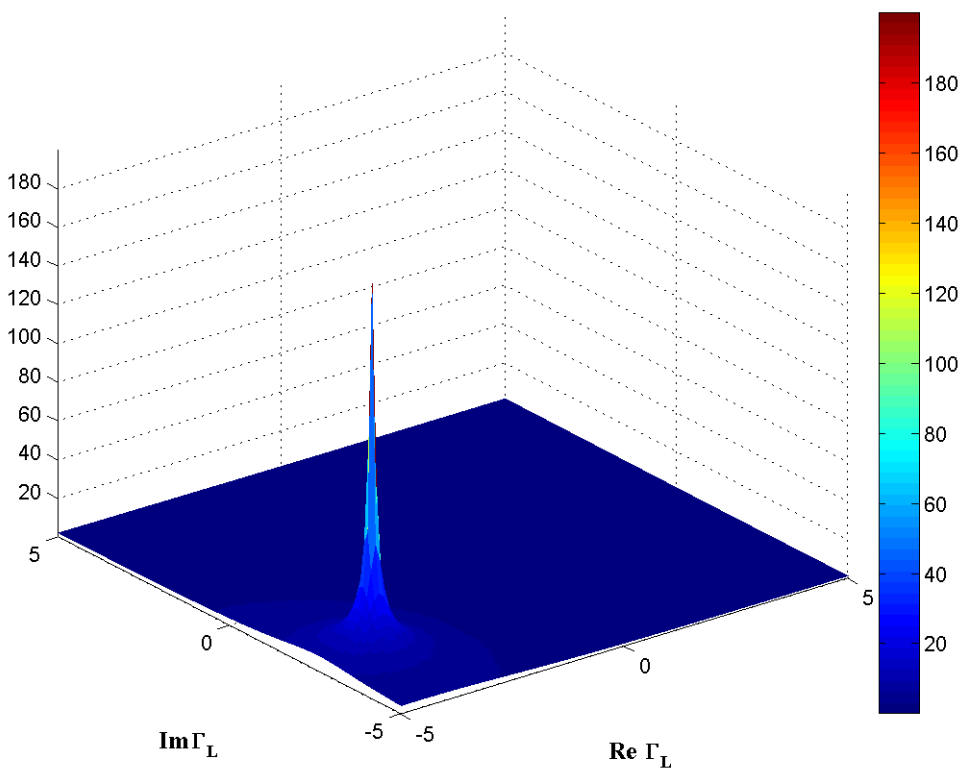

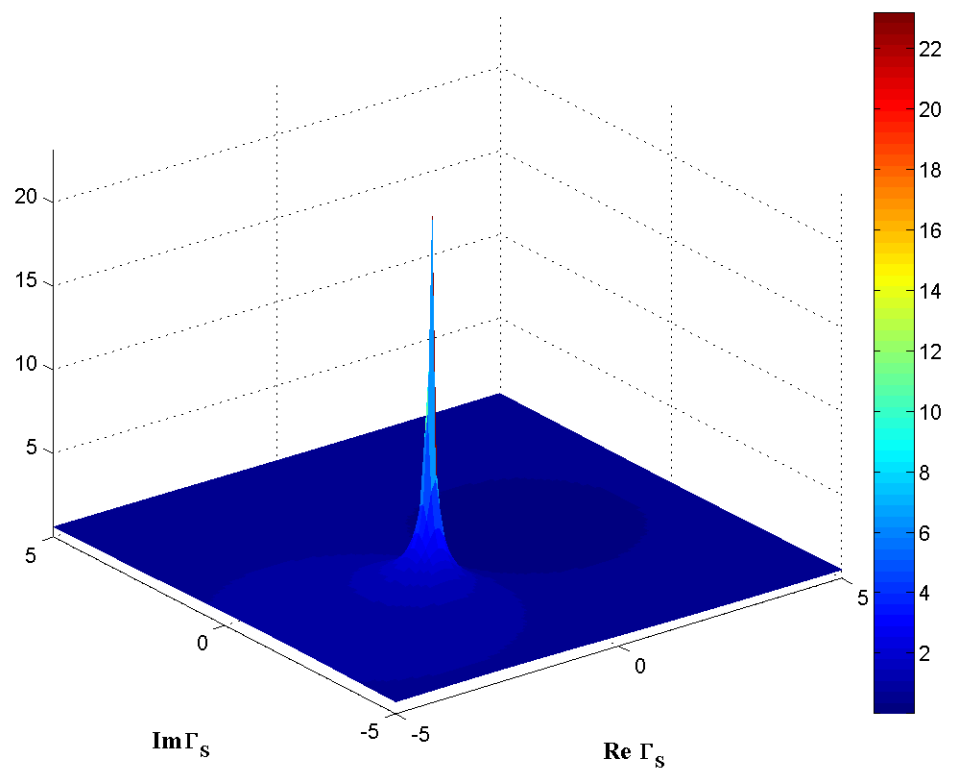

3D representation of $|\Gamma_{in}|$, $|\Gamma_{out}|$

- $\log_{10}|\Gamma_{in}|$, $\log_{10}|\Gamma_{out}|$

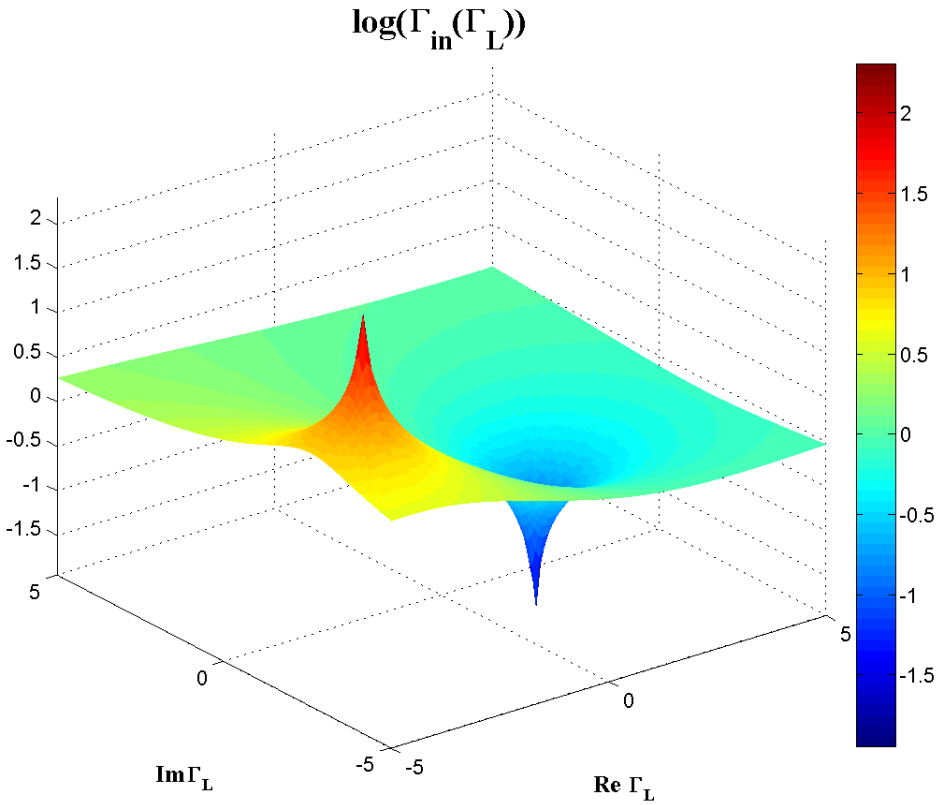

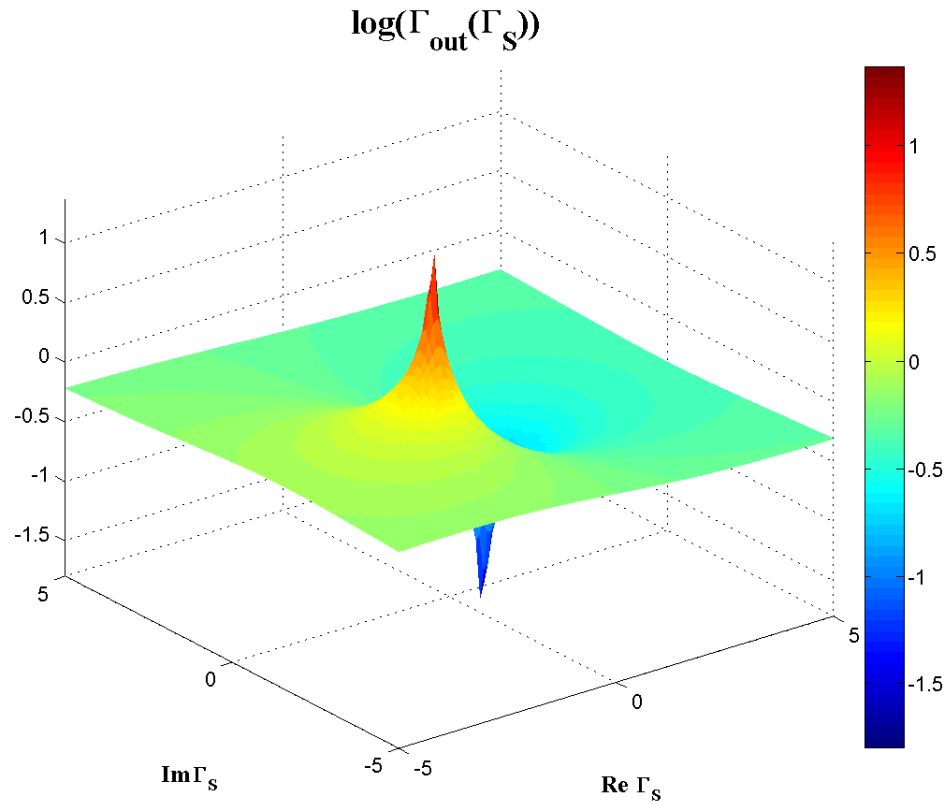

3D representation of $|\Gamma_{in}|$, $|\Gamma_{out}|$, $|\Gamma|=1$

- $|\Gamma| = 1 \rightarrow \log_{10}|\Gamma| = 0$, the intersection with the plane z = 0 is a circle

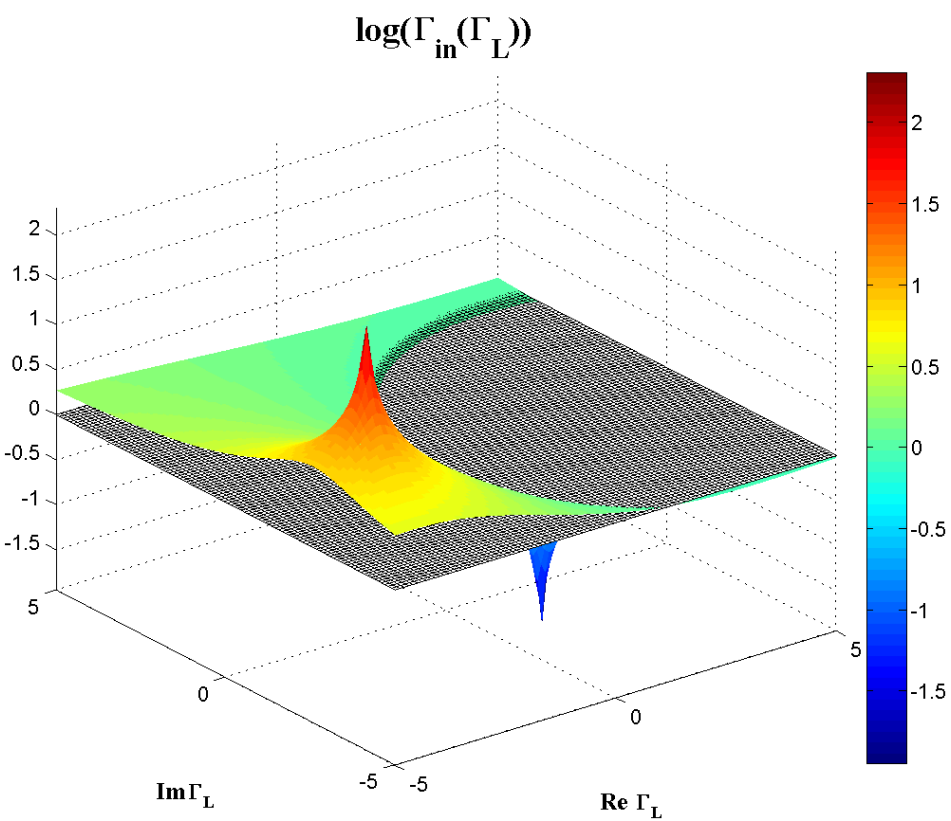

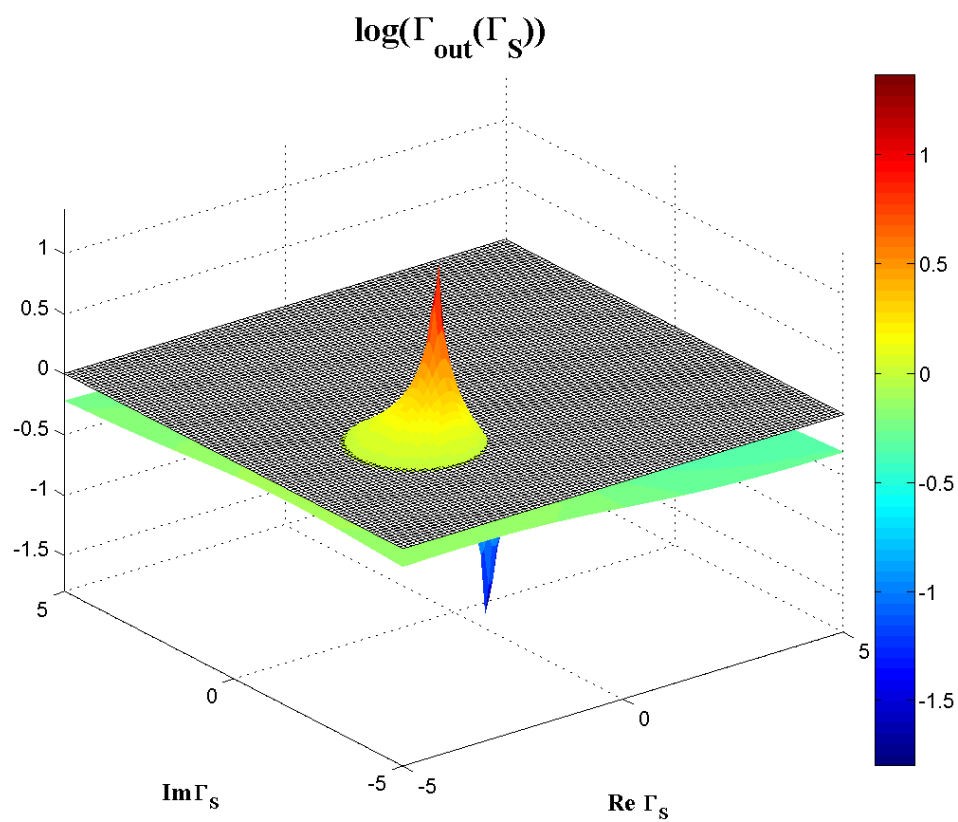

Contour map/lines

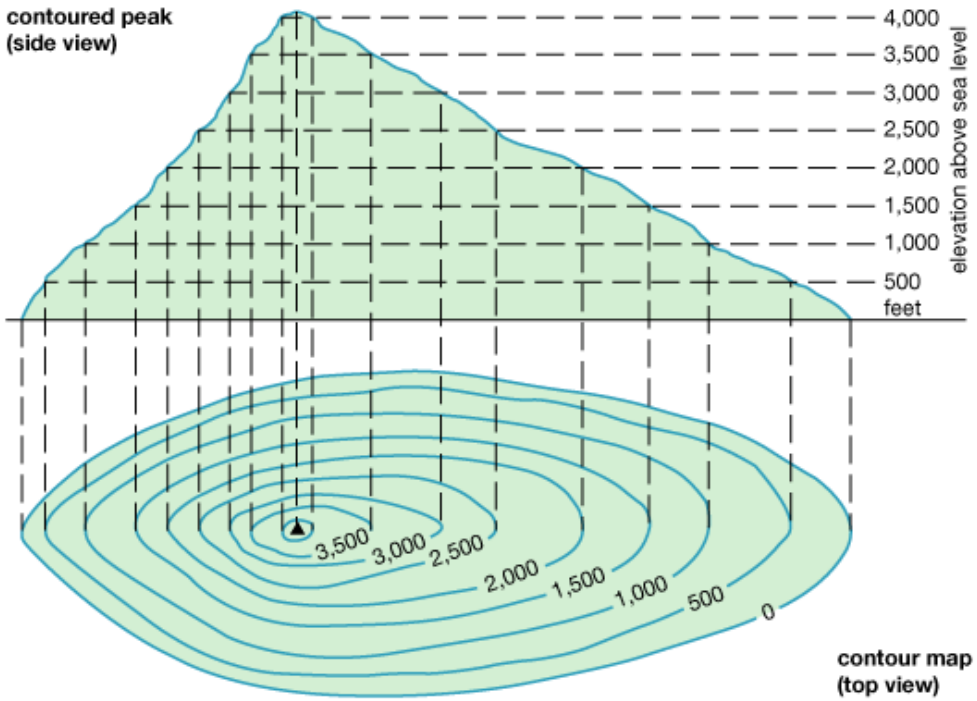

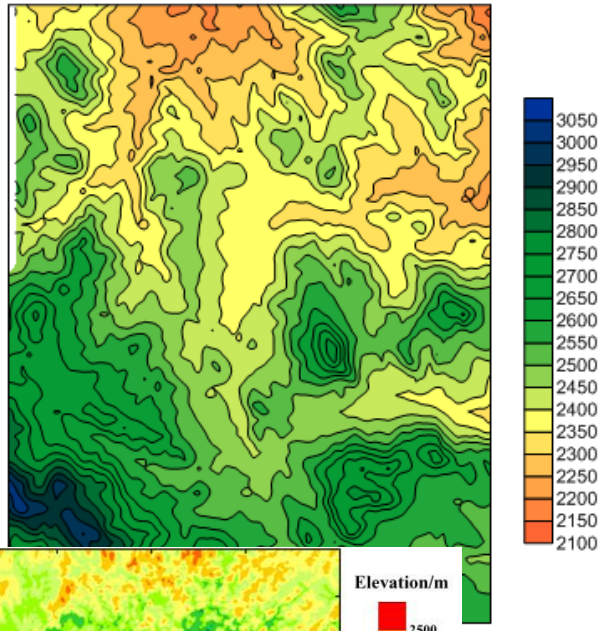

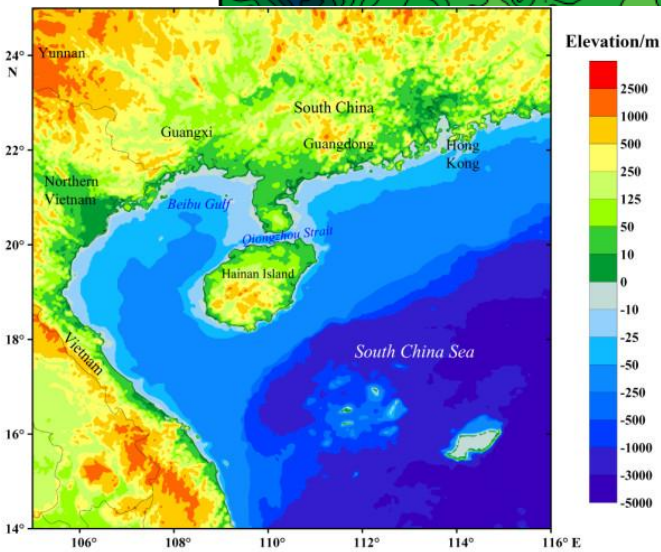

Contour lines of $\log_{10}|\Gamma_{in}|$

- $\log_{10}|\Gamma_{in}| = 0$, Γ_L, CSOUT

$\log_{10}|\Gamma_{in}| = 0$,
$|\Gamma_{in}| = 1$

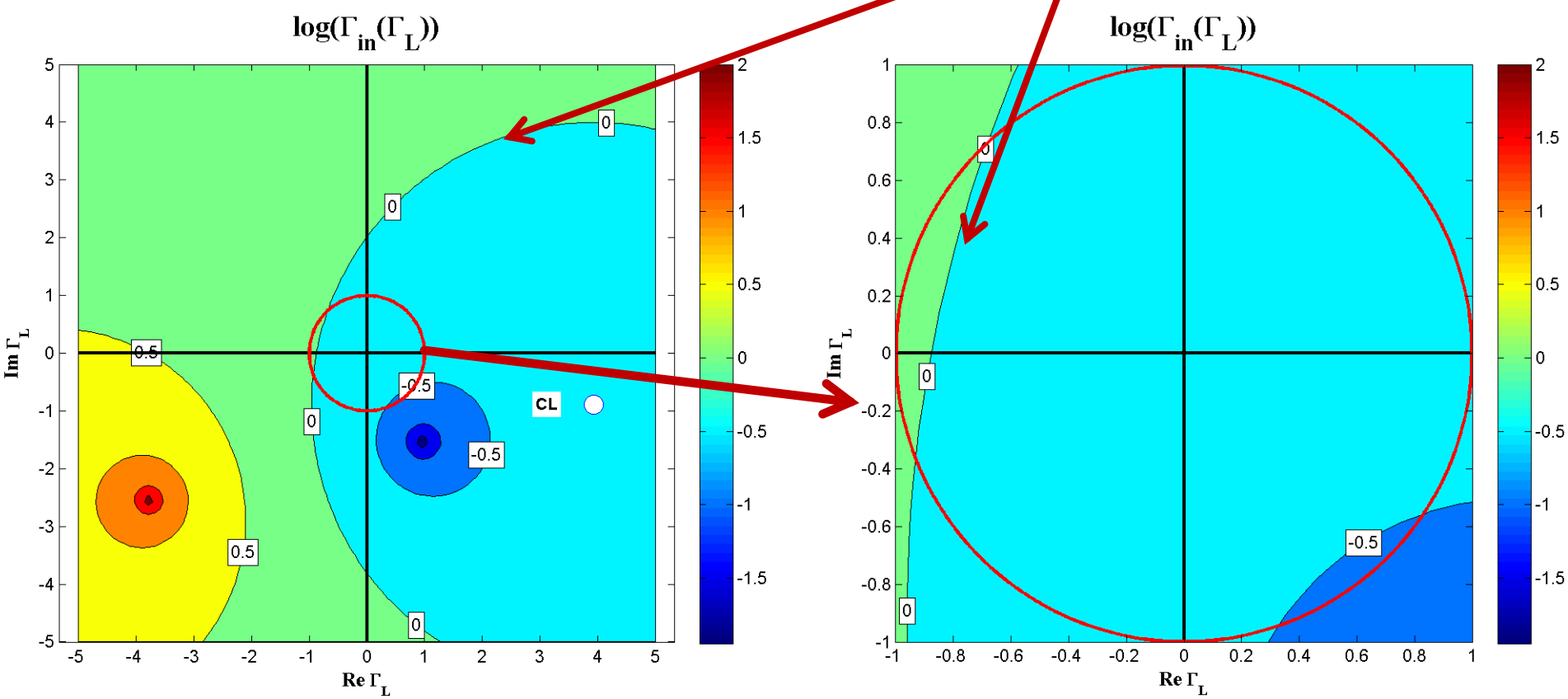

Contour lines of $\log_{10}|\Gamma_{out}|$

- $\log_{10}|\Gamma_{out}| = 0$, Γ_S, CSIN

$\log_{10}|\Gamma_{out}| = 0$,
$|\Gamma_{out}| = 1$

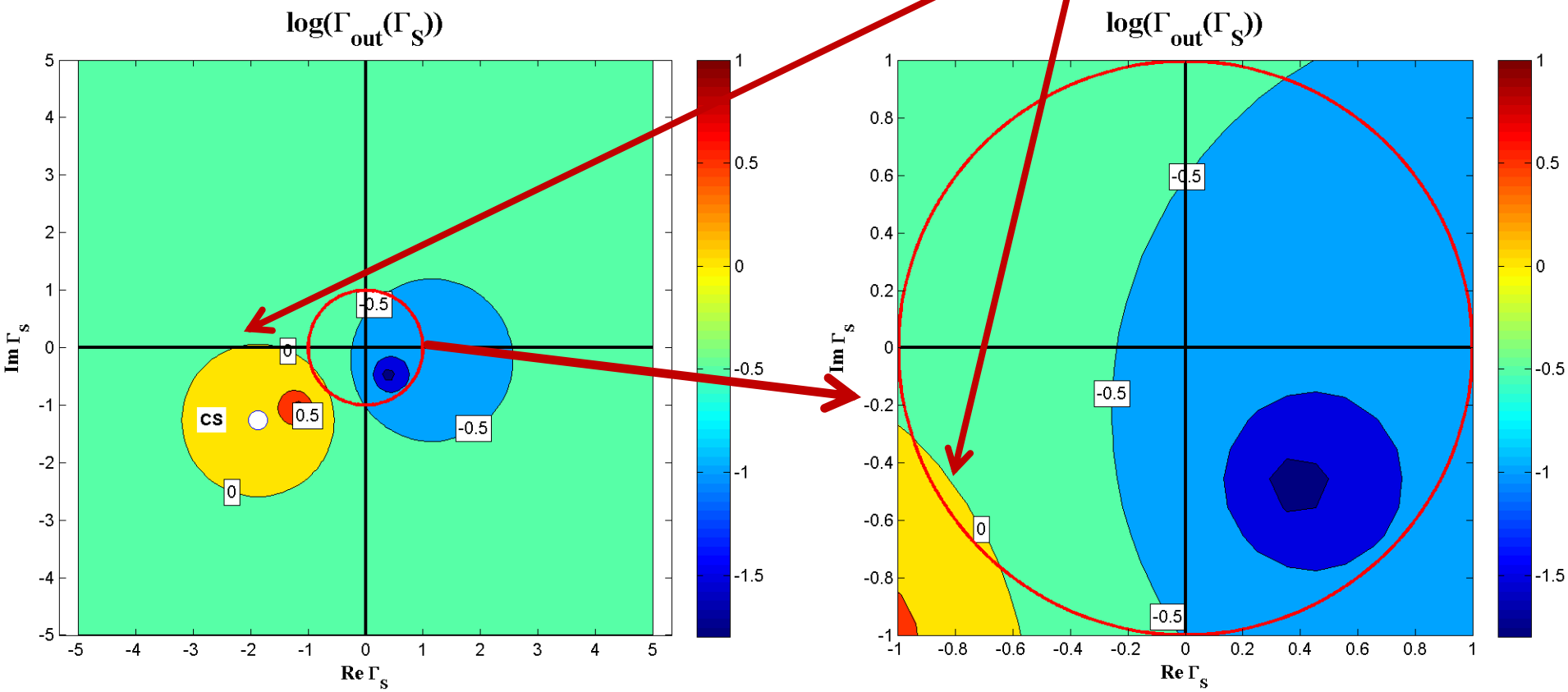

CSIN, CSOUT

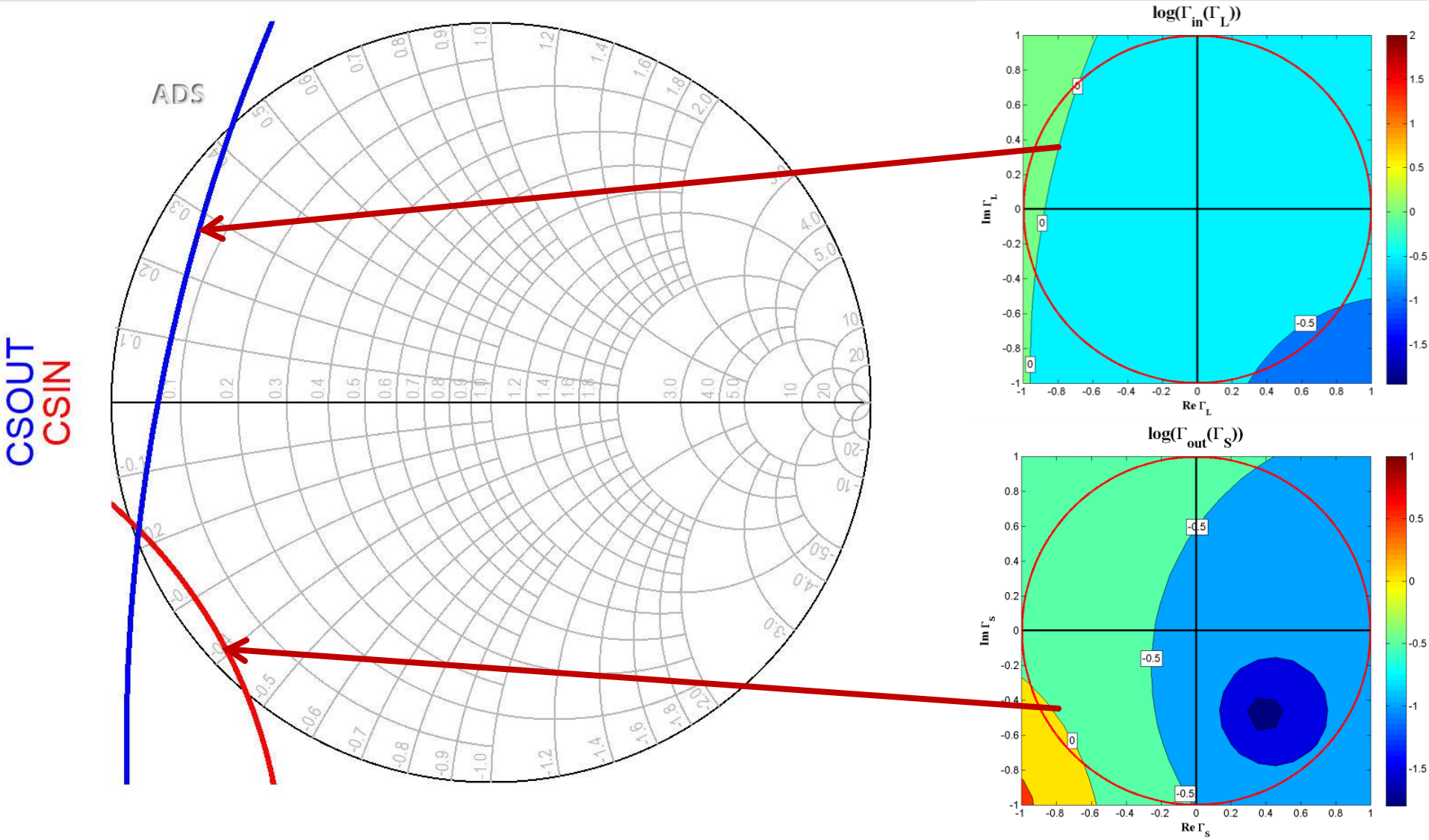

Several possible positioning

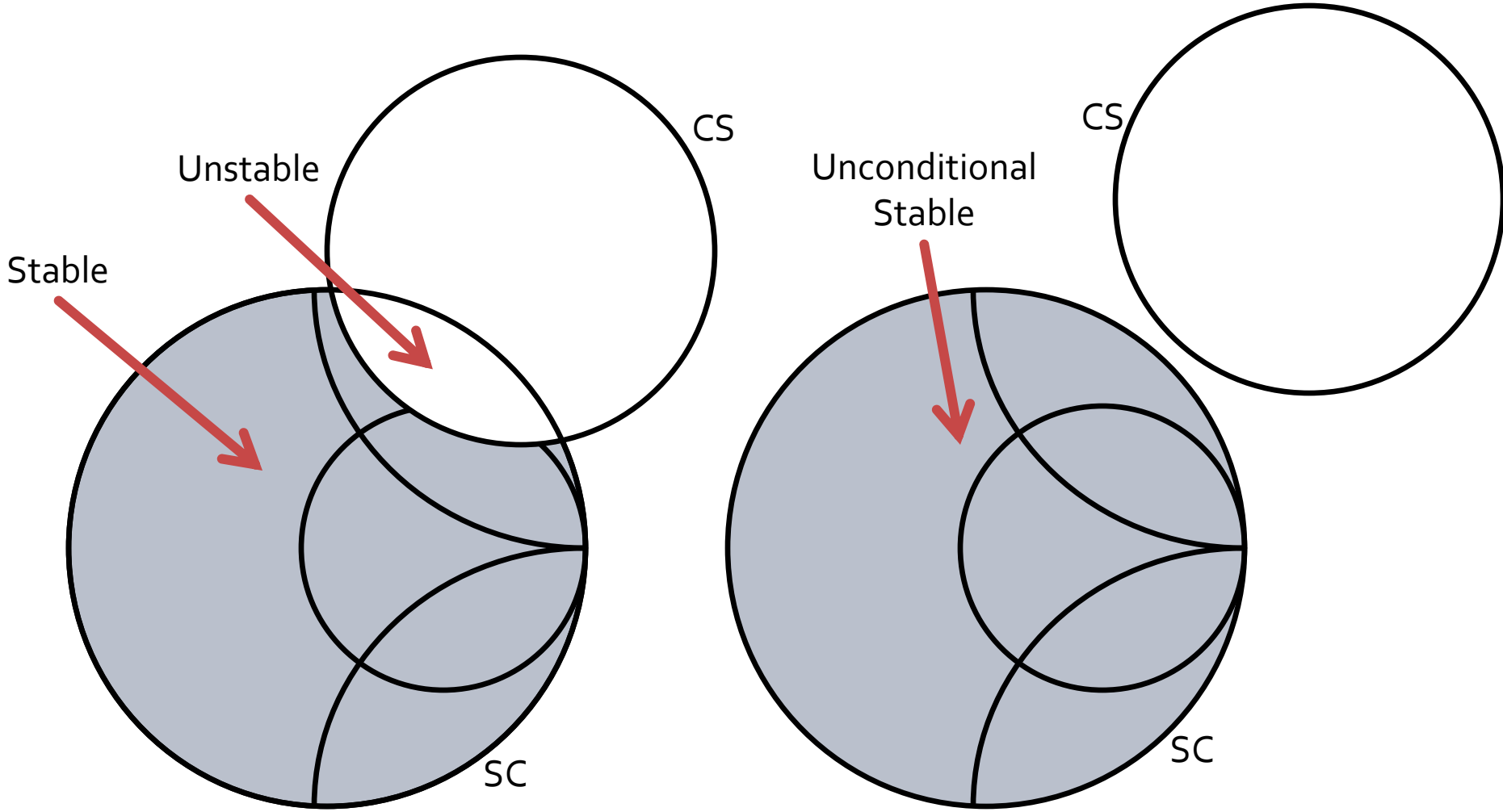

Several possible positioning

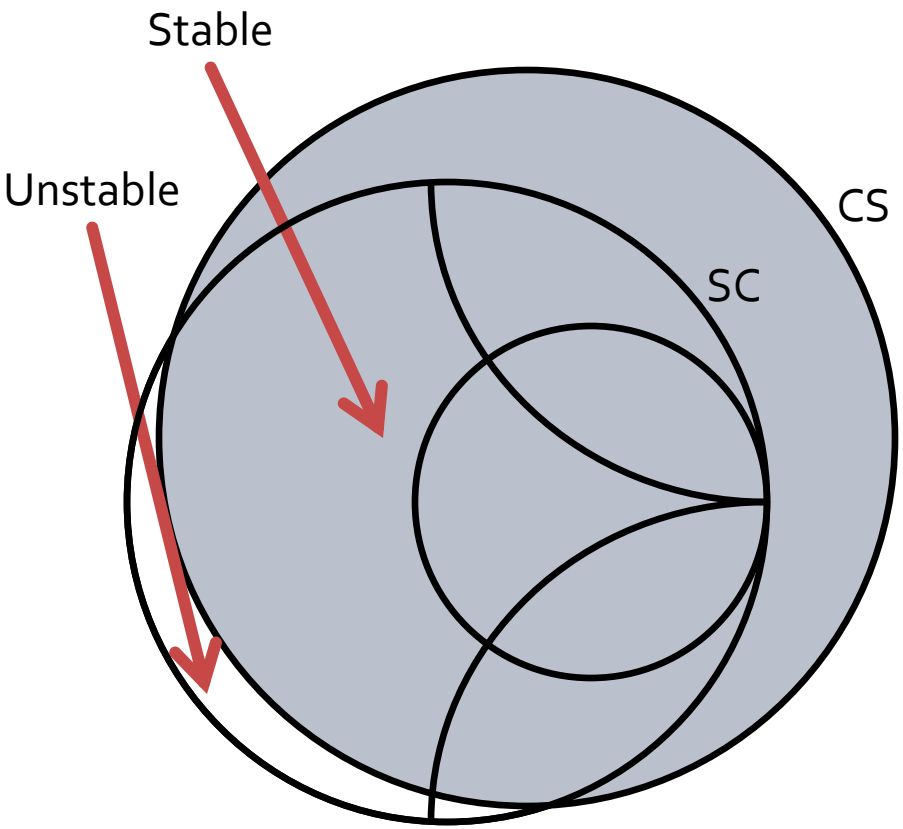

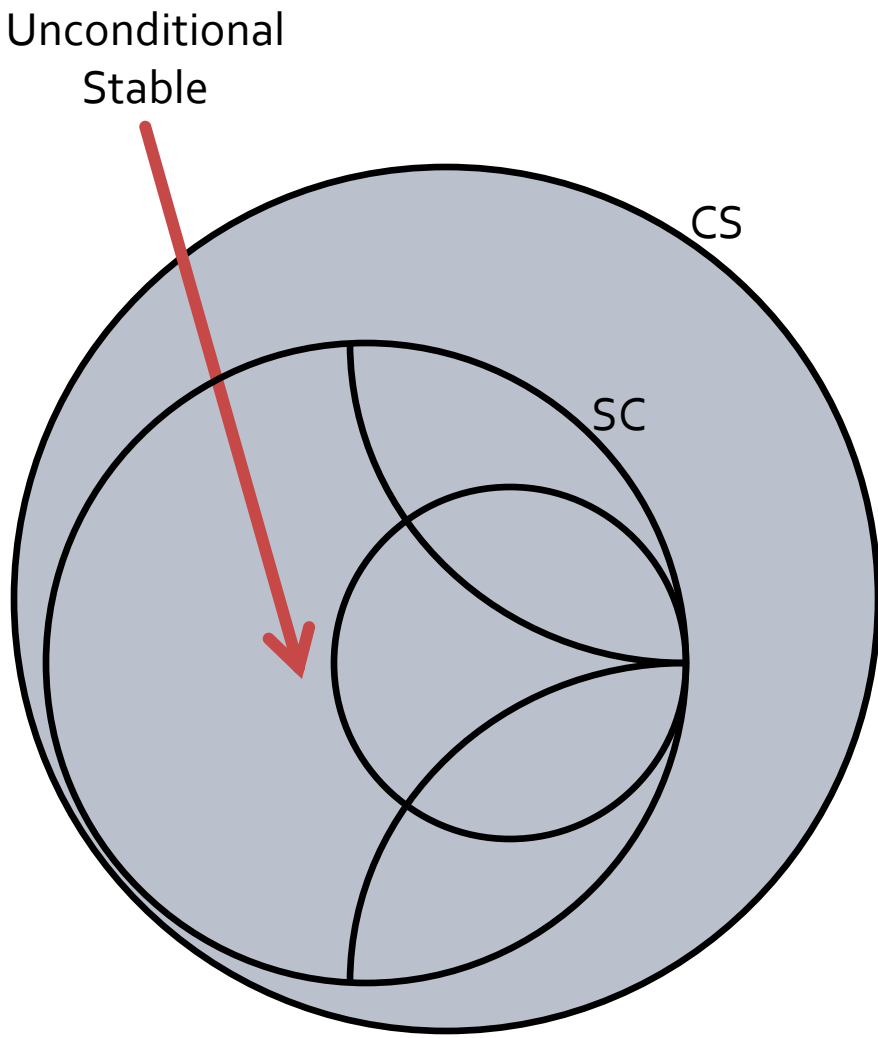

(Quite) Rare positioning

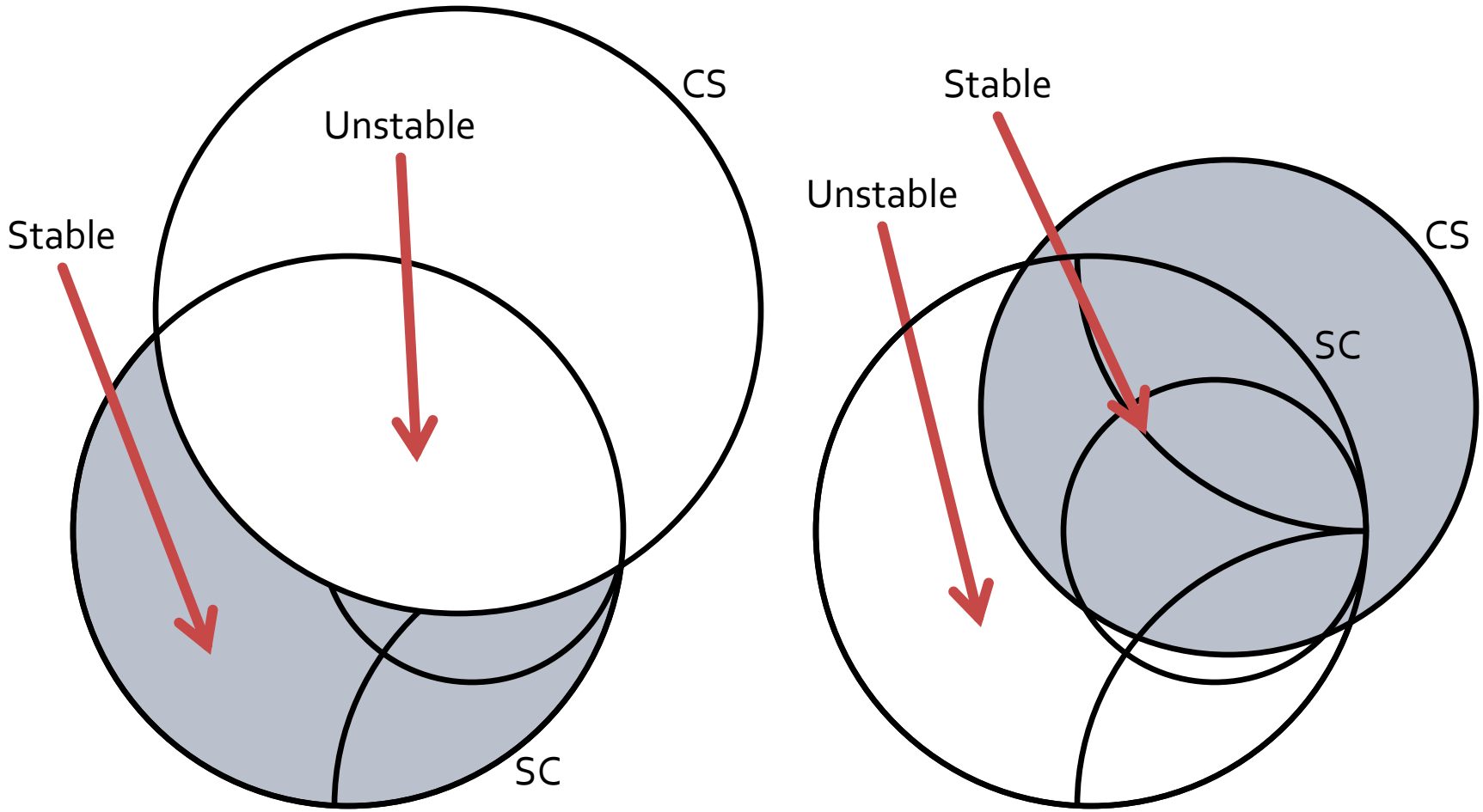

Stability

- **Unconditional stability:** the circuit is unconditionally stable if $|\Gamma_{in}|<1$ and $|\Gamma_{out}|<1$ for **any** passive impedance of the load/source
- **Conditional stability:** the circuit is conditionally stable if $|\Gamma_{in}|<1$ and $|\Gamma_{out}|<1$ only for **some** passive impedance of the load/source
  - passive impedance of the load/source <-> interior of the Smith Chart (radius 1 circle in the complex plane)

Unconditional stability

- The two-port is unconditionally stable if either:
  - The stability circle is disjoint with the Smith Chart (exterior to the Chart) and the stable region is outside the circle
  - The stability circle encloses the entire Smith Chart and the stable region is inside the circle
- One mandatory condition for unconditional stability is |S11| < 1 (CSOUT) or |S22| < 1 (CSIN) – if in at least one point the two-port is not stable then it cannot be unconditionally stable
- Mathematically :

$$\begin{cases} \left| |C_L| - R_L \right| > 1 \\ |S_{11}| < 1 \end{cases} \qquad \begin{cases} \left| |C_S| - R_S \right| > 1 \\ |S_{22}| < 1 \end{cases}$$

Tests for Unconditional Stability

- Useful for wide frequency range analysis
- It is not enough to check the stability only at the operating frequencies
  - we must obtain stable operation for chosen Γ_L and Γ_S at **any** frequency

Circles in wide frequency range

CSIN

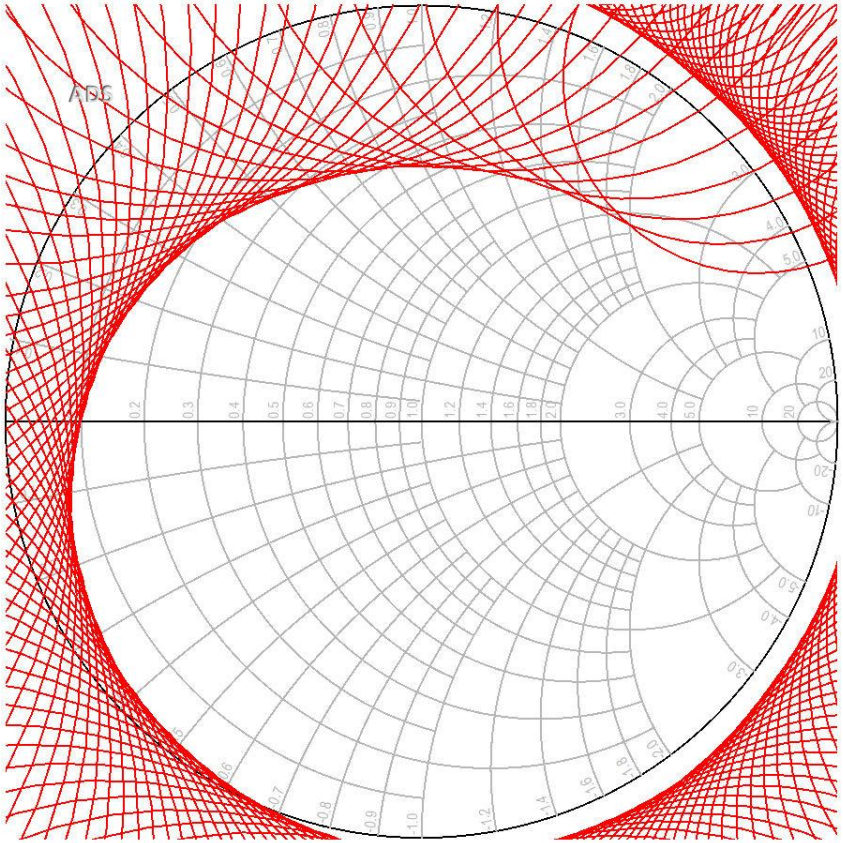

CSOUT

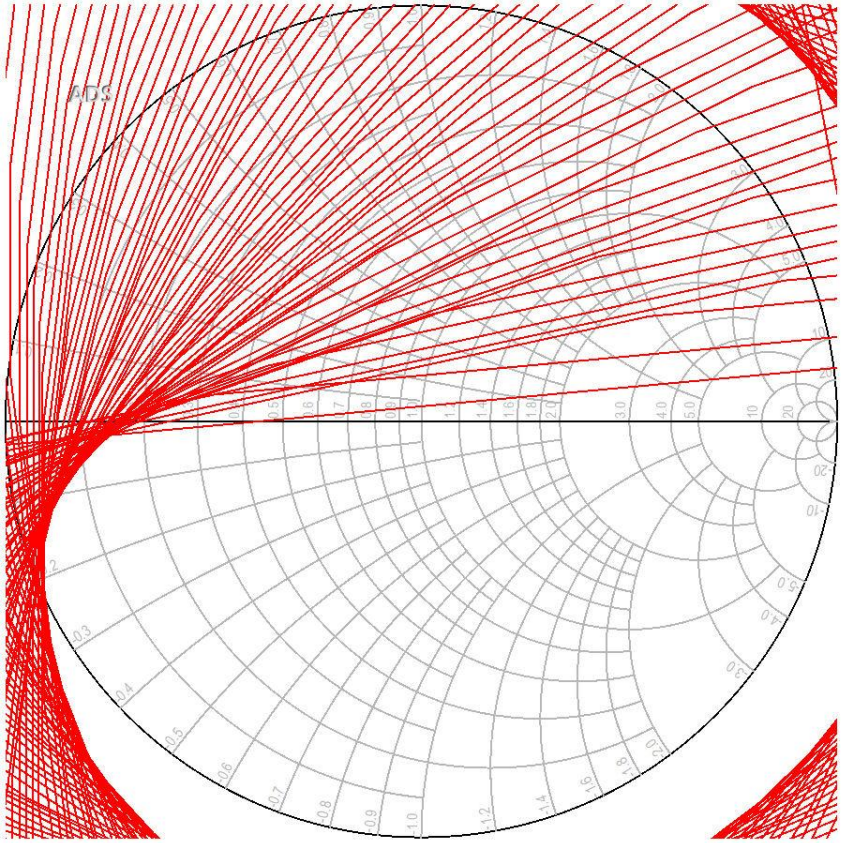

Rollet's condition

$$K = \frac{1 - |S_{11}|^2 - |S_{22}|^2 + |\Delta|^2}{2 \cdot |S_{12} \cdot S_{21}|} \qquad \Delta = S_{11} \cdot S_{22} - S_{12} \cdot S_{21}$$

- The two-port is **unconditionally stable** if:
- two conditions are simultaneously satisfied:
  - K > 1
  - |Δ| < 1
- together with the implicit conditions:
  - |S11| < 1
  - |S22| < 1

$$K = \frac{1 - |S_{11}|^2 - |S_{22}|^2 + |\Delta|^2}{2 \cdot |S_{12} \cdot S_{21}|} > 1 \qquad |\Delta| = |S_{11} \cdot S_{22} - S_{12} \cdot S_{21}| < 1$$

μ Criterion

- Rollet's condition cannot be used to compare the relative stability of two or more devices because it involves constraints on two separate parameters, K and Δ

$$\mu = \frac{1 - |S_{11}|^2}{|S_{22} - \Delta \cdot S_{11}^*| + |S_{12} \cdot S_{21}|} > 1$$

- The two-port is **unconditionally stable** if:
  - μ > 1
- together with the implicit conditions:
  - |S11| < 1
  - |S22| < 1
- In addition, it can be said that larger values of μ imply greater stability
  - μ is the distance from the center of the Smith Chart to the closest output stability circle

μ′ Criterion

- Dual parameter to μ, determined in relation to the input stability circles

$$\mu' = \frac{1 - |S_{22}|^2}{|S_{11} - \Delta \cdot S_{22}^*| + |S_{12} \cdot S_{21}|} > 1$$

- The two-port is **unconditionally stable** if:
  - μ′ > 1
- together with the implicit conditions:
  - |S11| < 1
  - |S22| < 1
- In addition, it can be said that larger values of μ′ imply greater stability
  - μ′ is the distance from the center of the Smith Chart to the closest input stability circle

Rollet's condition

- ATF-34143 **at Vds=3V Id=20mA**.
- @0.5÷18GHz

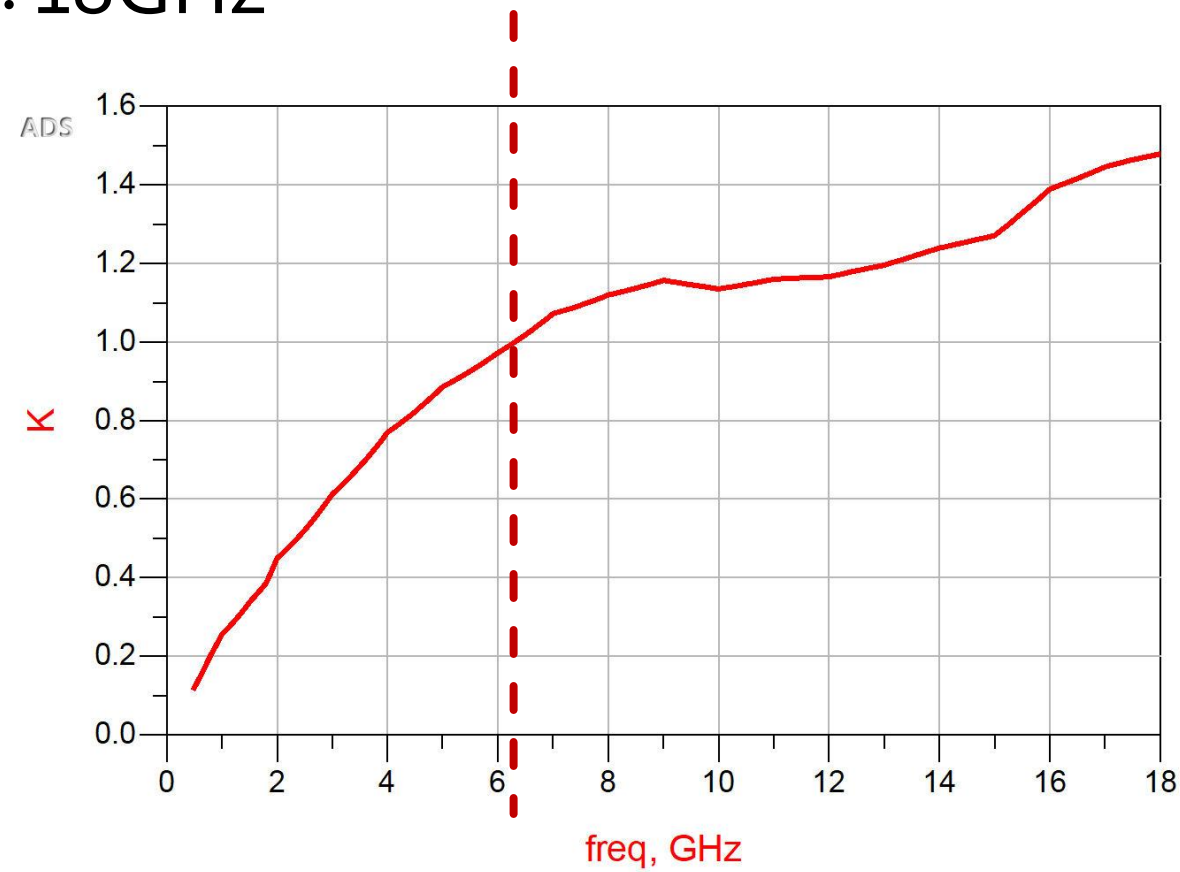

μ Criterion

- ATF-34143 **at Vds=3V Id=20mA**.
- @0.5÷18GHz

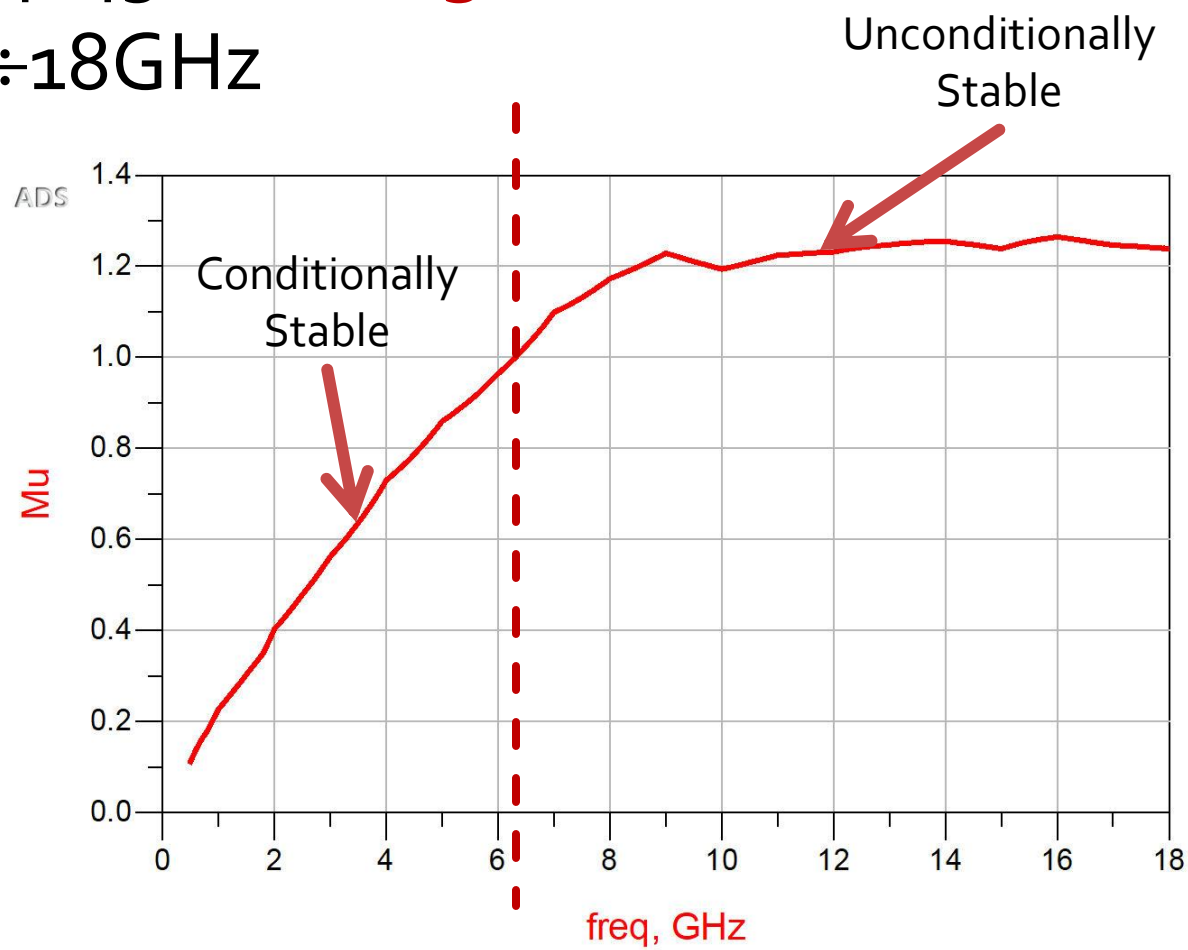

μ' Criterion

- ATF-34143 **at Vds=3V Id=20mA**.
- @0.5÷18GHz

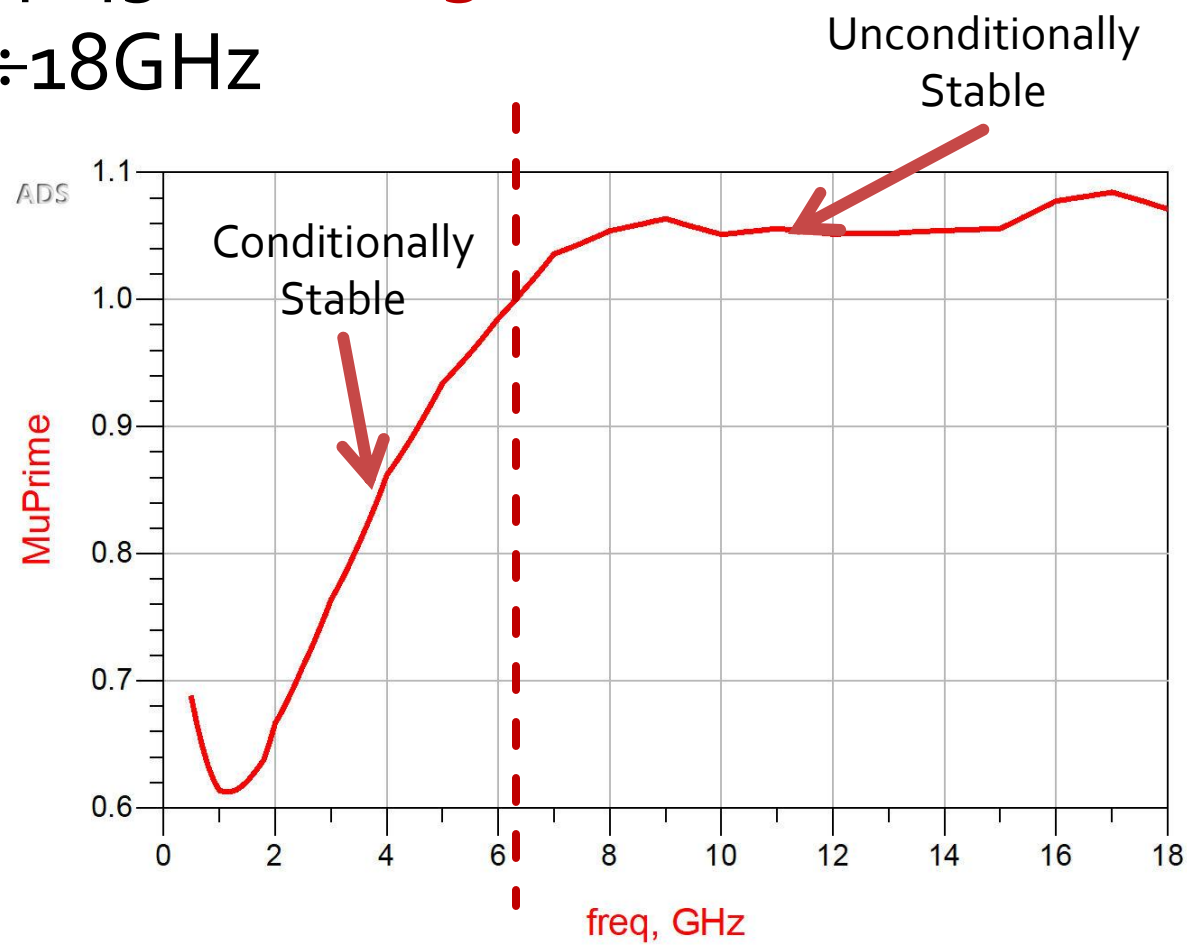

Stability

- ATF-34143 **at Vds=3V Id=20mA**.
- @0.5÷18GHz
- unconditionally stable for f > 6.31GHz

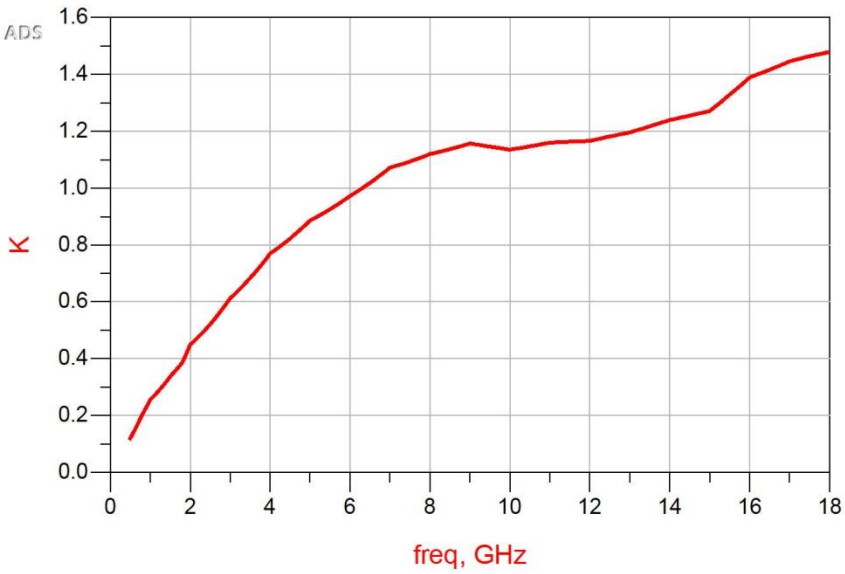

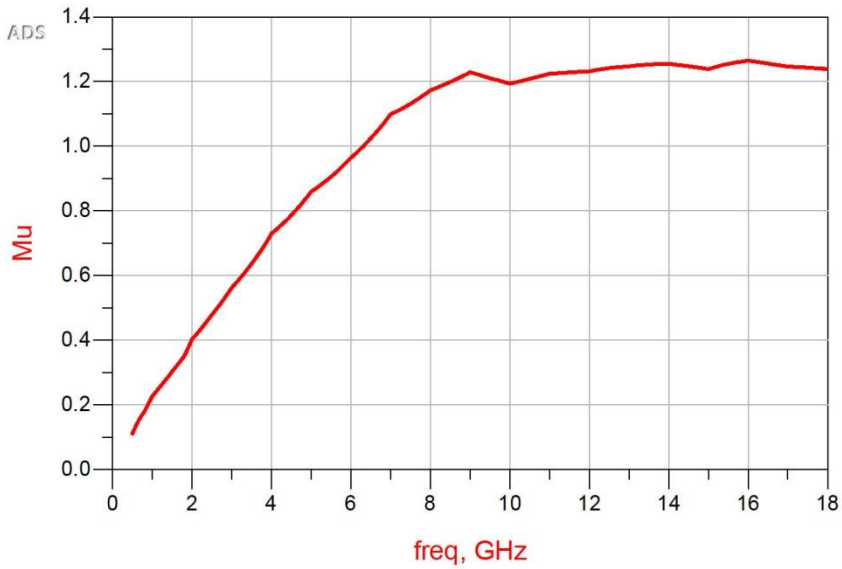

Stabilization of two-port

- Unconditional stability in a wide frequency range has some important advantages
  - Ex: We can use ATF 34143 to design a (conditionally) stable amplifier at 5GHz, but this design is useless if the amplifier oscillates at 500MHz ($\mu \approx 0.1$)
- **The minimal requirement** when working with conditionally stable devices is to **check stability** at several frequencies over the operating bandwidth and outside the bandwidth
- Unconditional stability can be forced by inserting series/shunt resistors at two-port's input/output (with loss of gain!)

Input series resistor

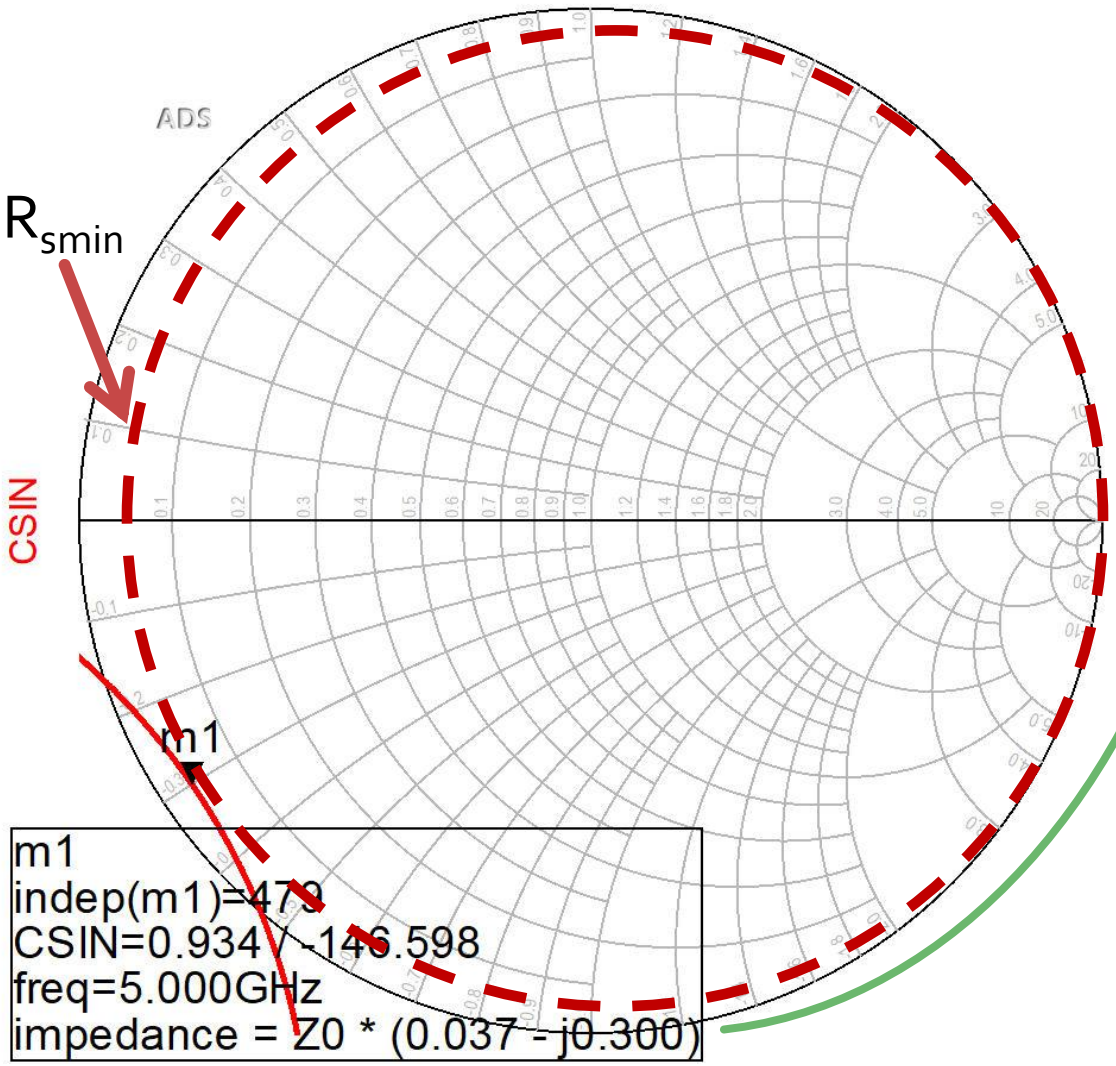

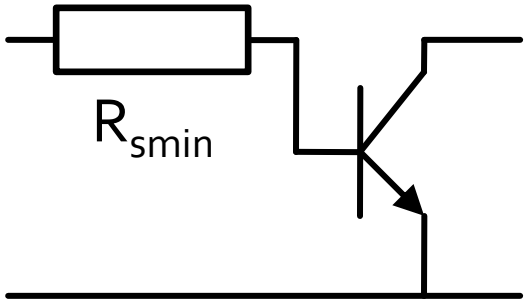

$$z = 0.037 - j \cdot 0.3$$

$$R_{s\,\min} = 0.037 \cdot 50\Omega = 1.85\Omega$$

ADS, Rs = 2Ω

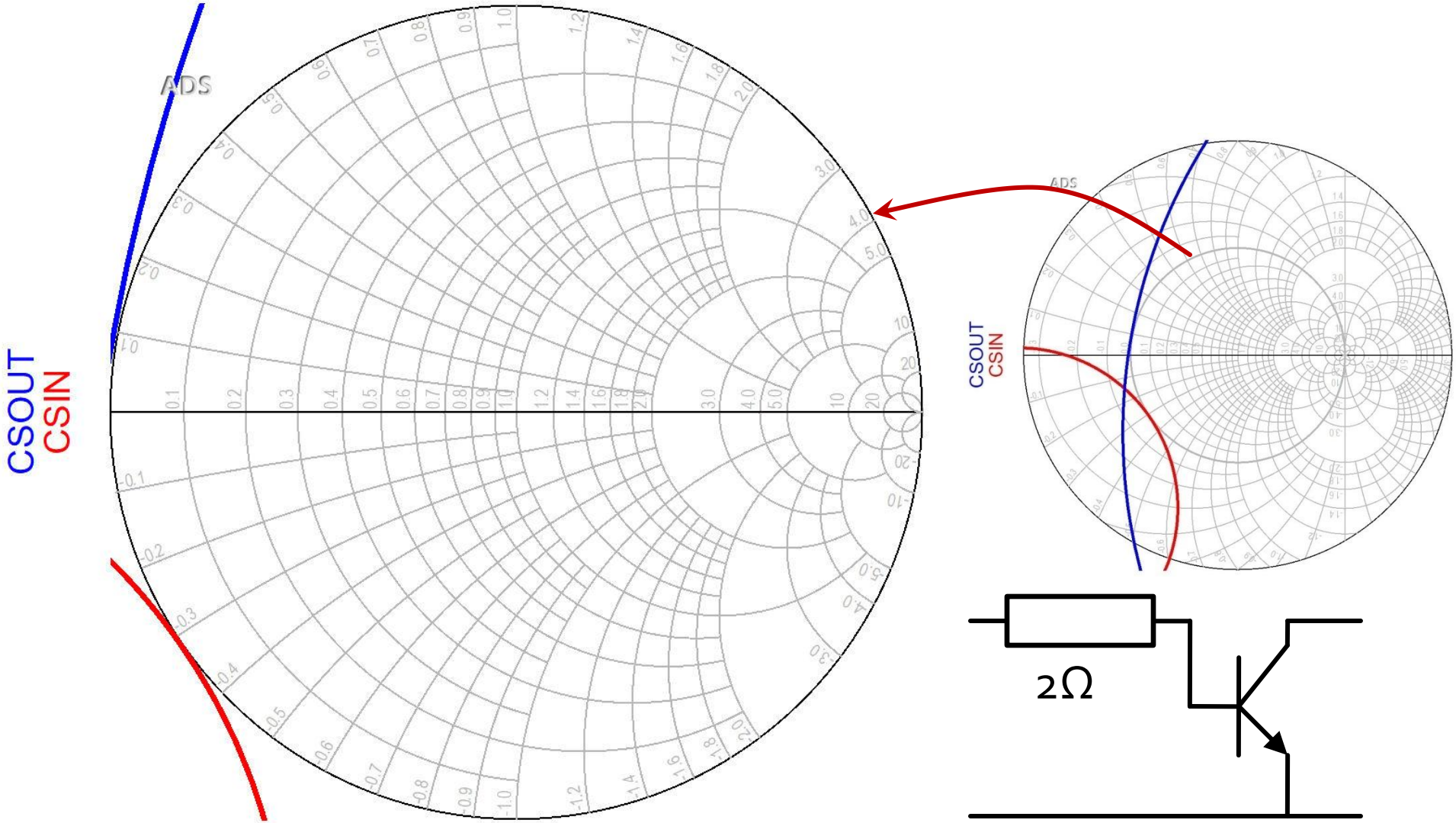

Input series resistor

- Rs = 2Ω
- K = 1.008, MAG = 13.694dB @ 5GHz
  - no stabilization, K = 0.886, MAG = 14.248dB @ 5GHz

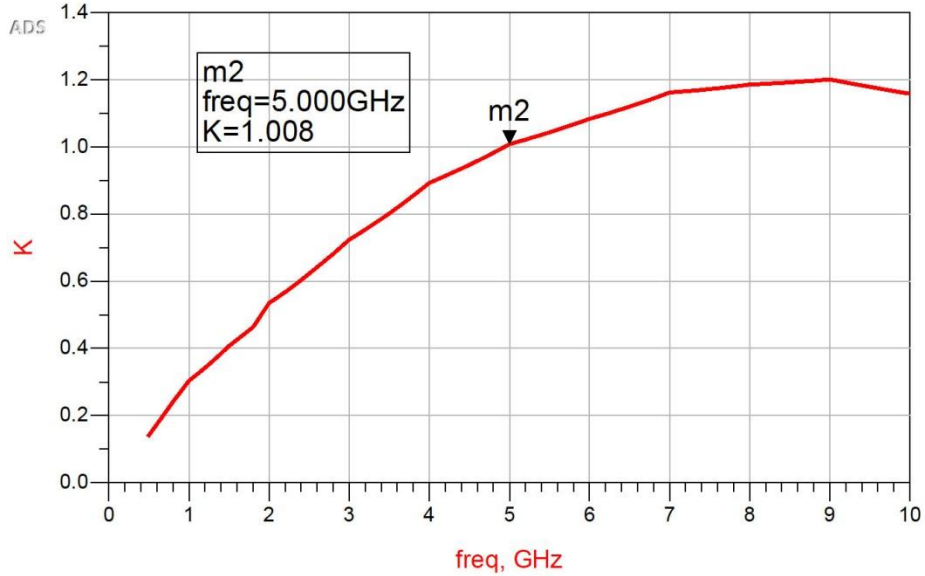

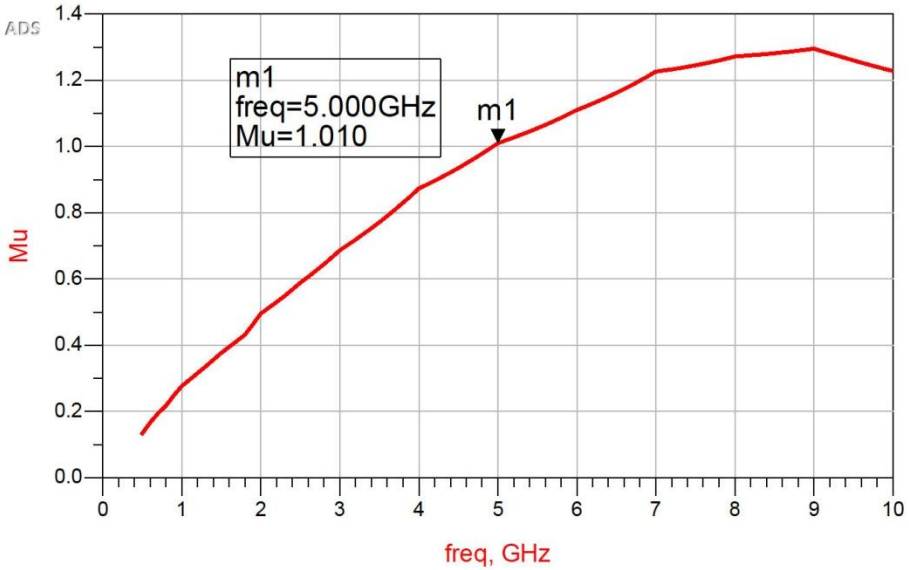

Input shunt resistor

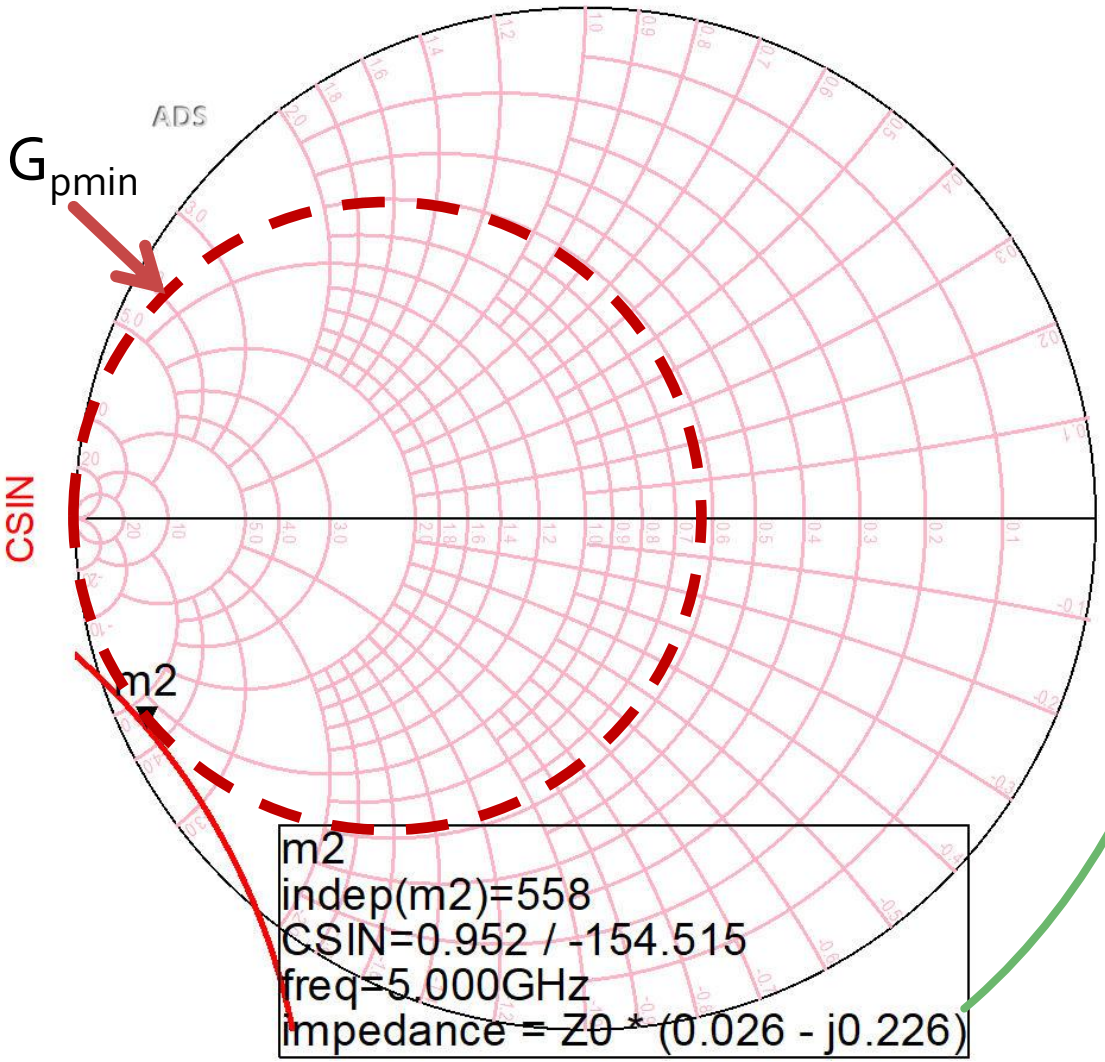

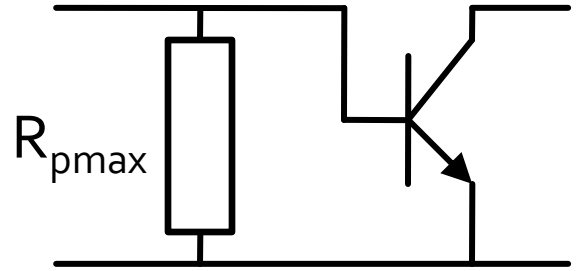

$$R_{p\max} = \frac{1}{G_{p\min}}$$

$$z = 0.026 - j \cdot 0.226$$

$$y = \frac{1}{z} = \frac{1}{0.026 - j \cdot 0.226}$$

$$y = 0.502 + j \cdot 4.367$$

$$R_{p\max} = \frac{50\Omega}{0.502} = 99.6\Omega$$

ADS, Rp = 90Ω

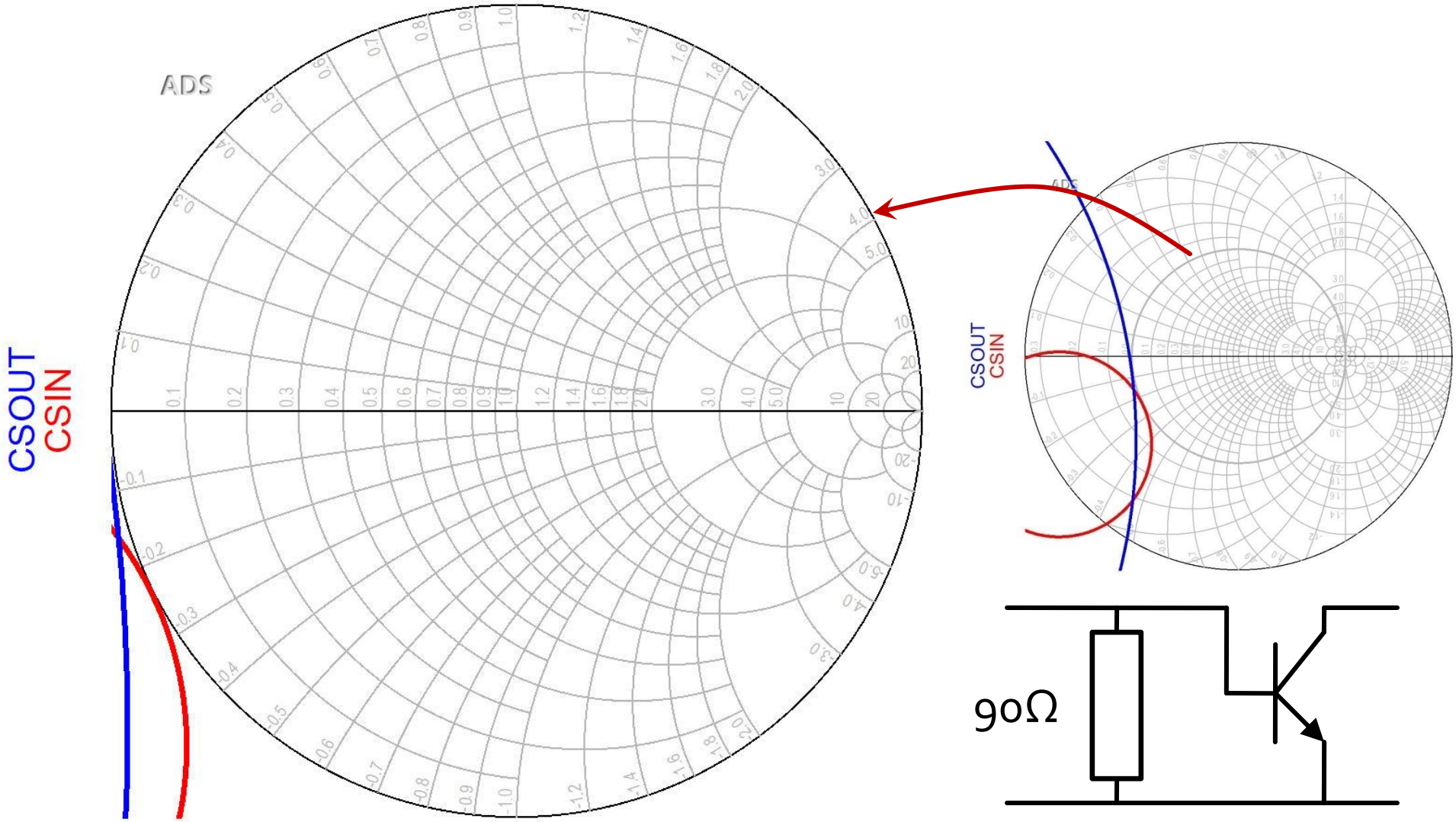

Input shunt resistor

- Rp = 90Ω
- K = 1.013, MAG = 13.561dB @ 5GHz
  - no stabilization, K = 0.886, MAG = 14.248dB @ 5GHz

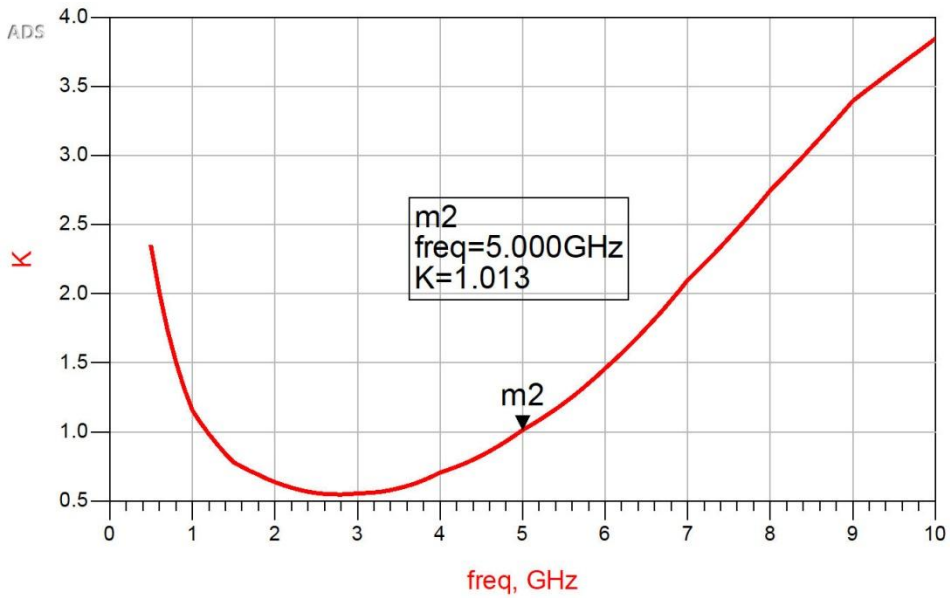

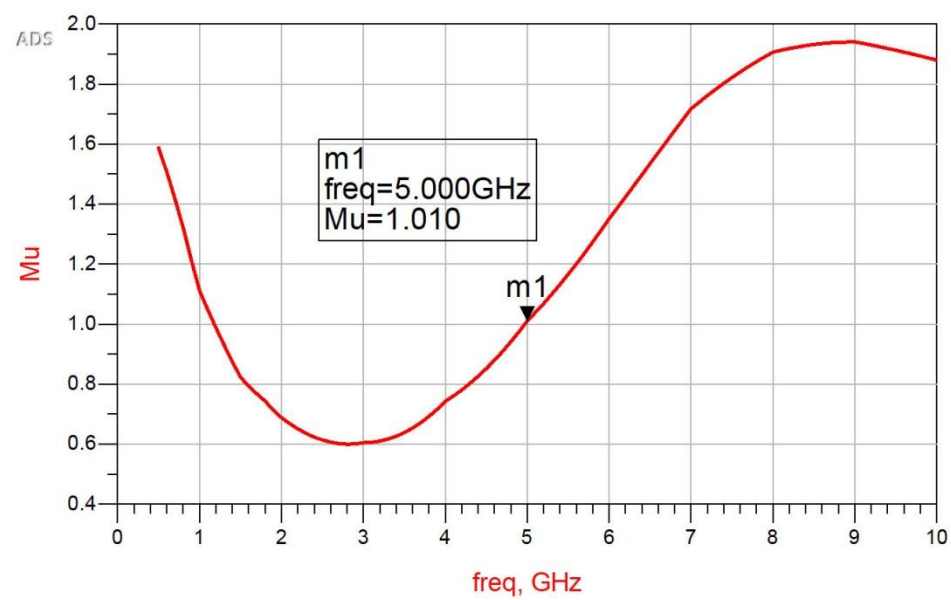

Output series/shunt resistor

- The procedure can be applied similarly at the output (finding g/r circles tangent to CSOUT)
- From previous examples, resistive loading at the input has a positive effect over output stability and vice versa (resistive loading at the output, effect over input stability)

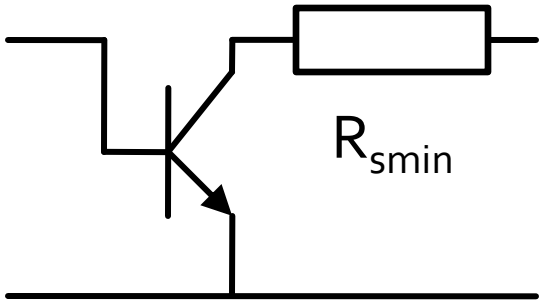

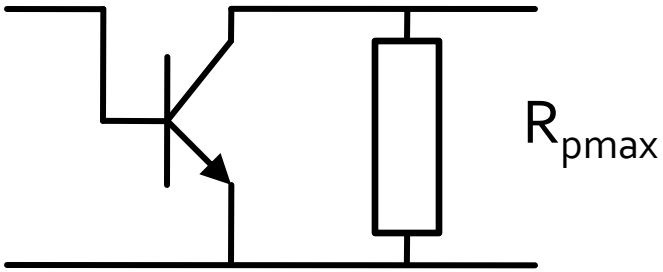

Stabilization of two-port

- Negative effect over the power gain
  - we must check MAG/MSG while designing resistive loading
- Negative effect over the noise (debated next)
- We can choose one of the 4 possibilities or a combination which offers better results (depending on transistor, application etc.)
- We can use frequency selective loading
  - Ex: RL, RC circuits which sacrifice performance only when needed to improve stability and have no effect at frequencies where the device is already stable
- It might be possible (and should be checked) that stability is improved as an effect of parasitic elements of biasing circuits (bypass capacitors and RF chokes)

Stabilization of two-port

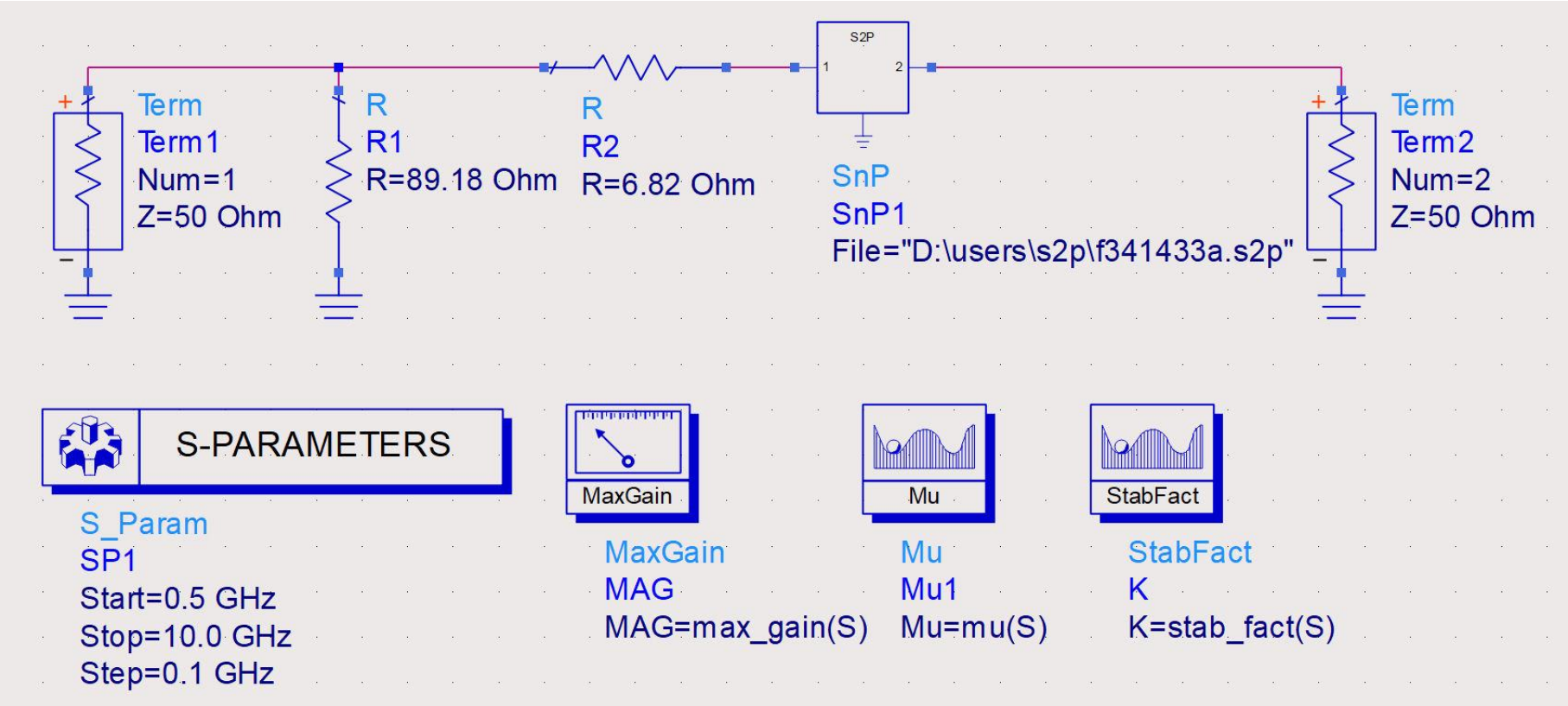

Stabilization of two-port

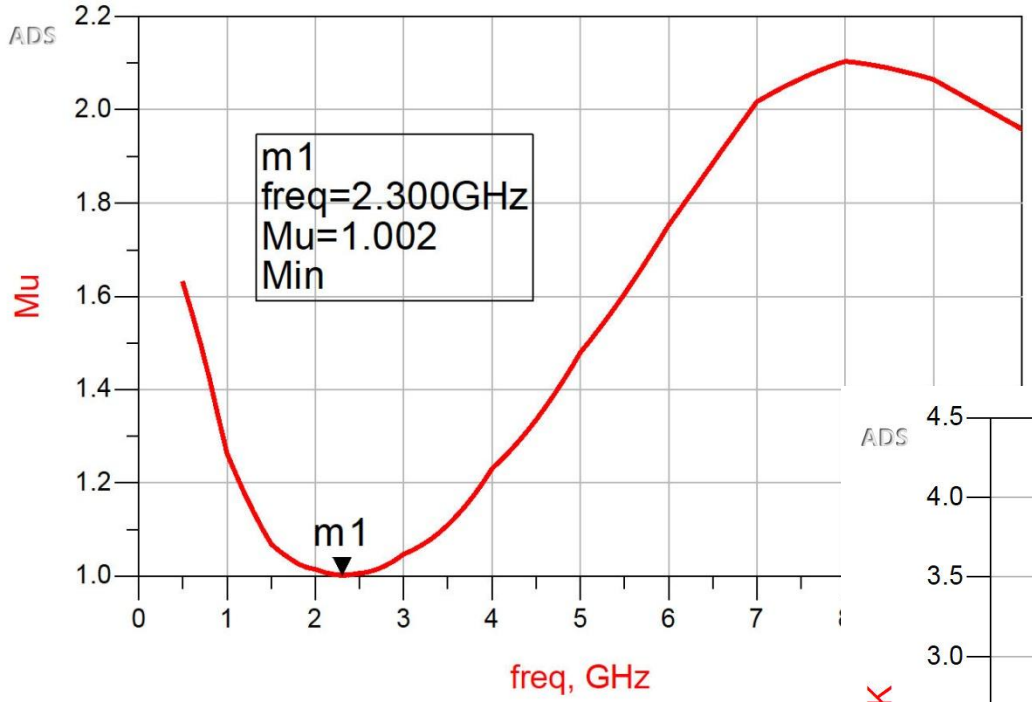

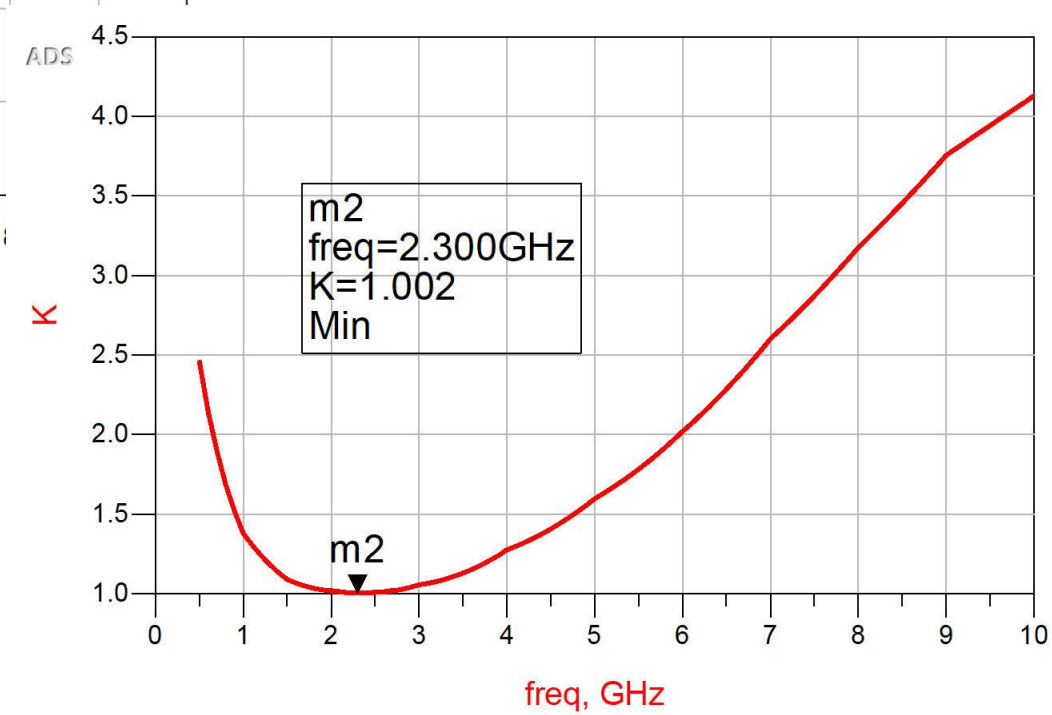

Stabilization of two-port

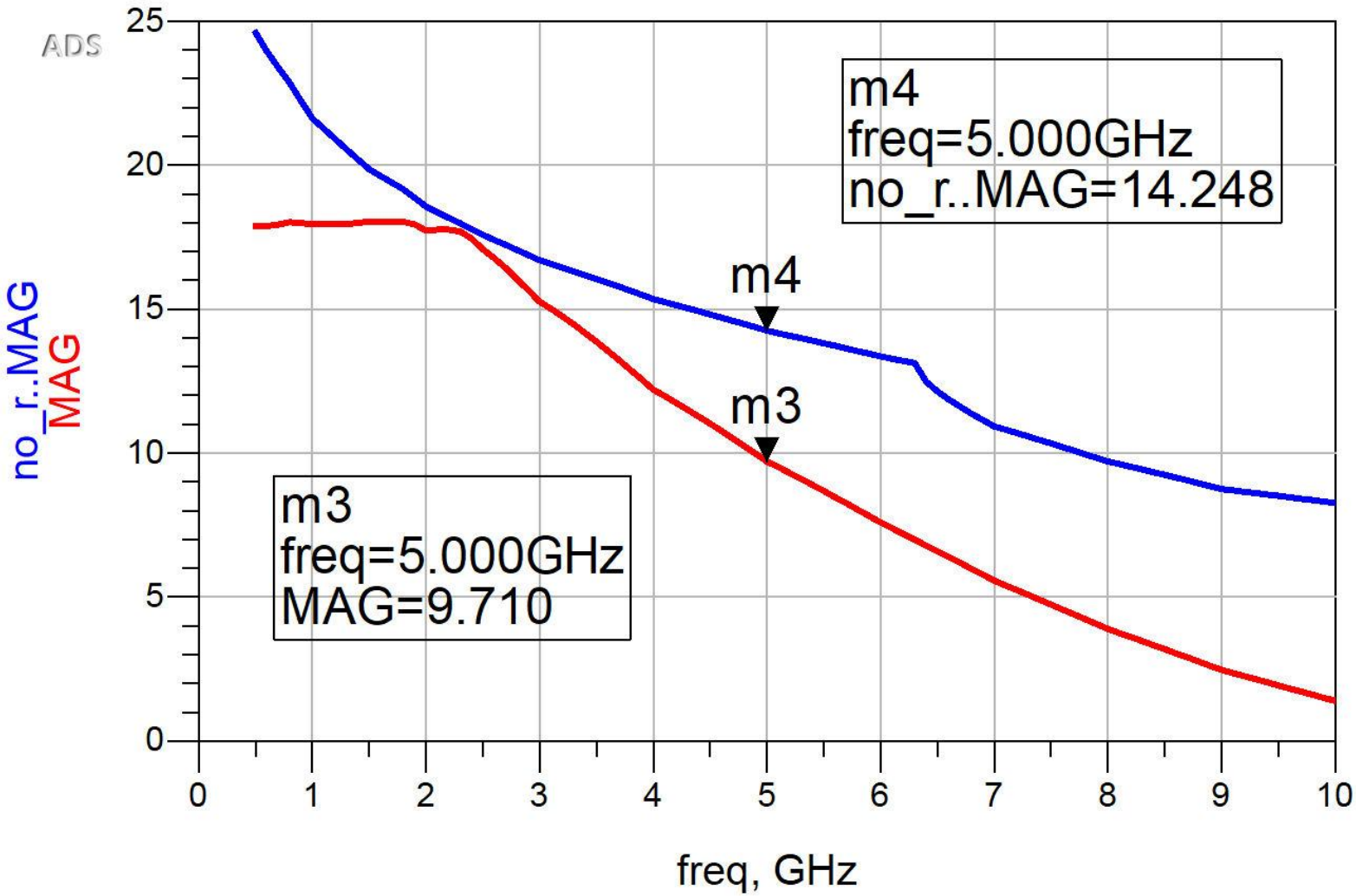

Stabilization of two-port

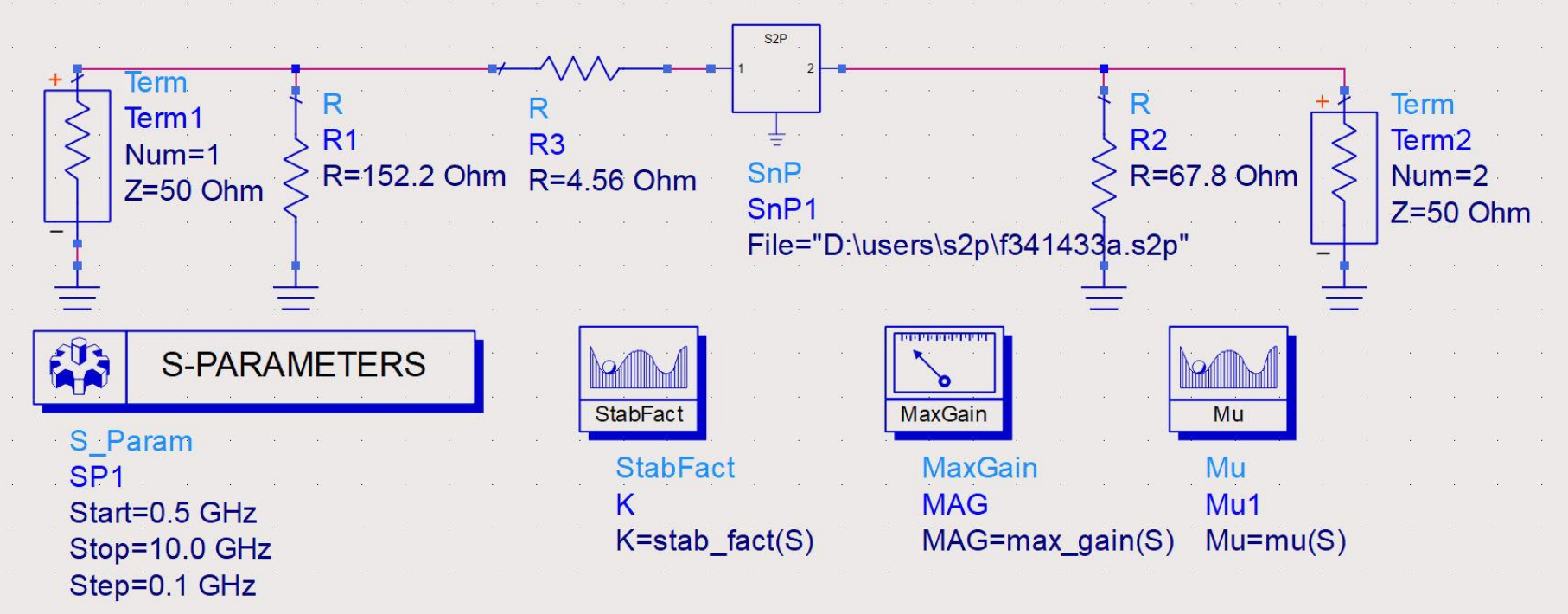

Stabilization of two-port

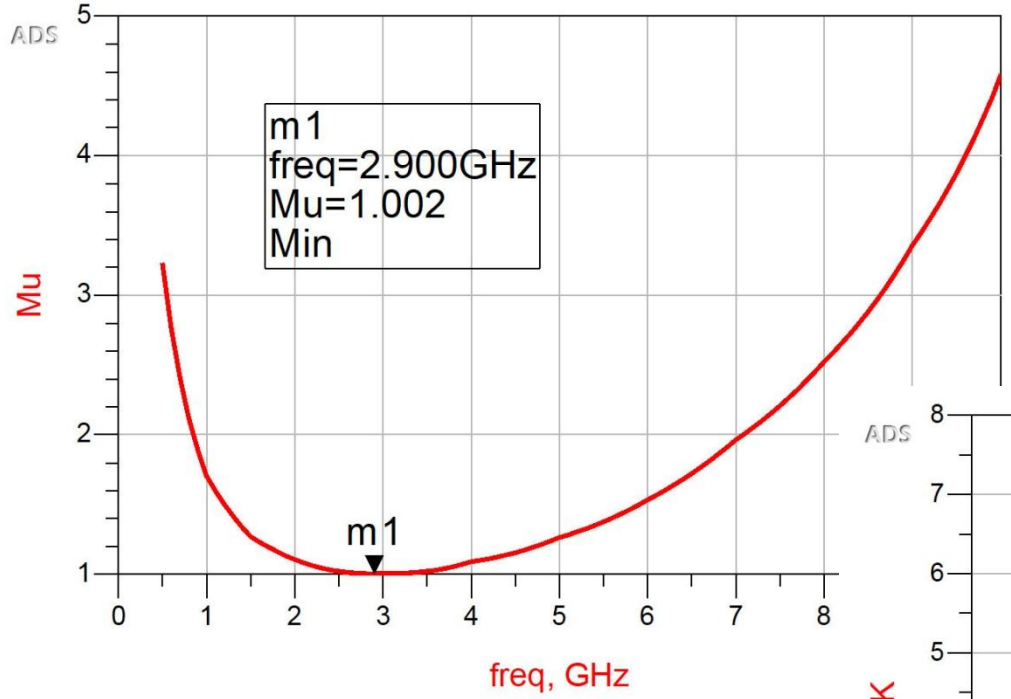

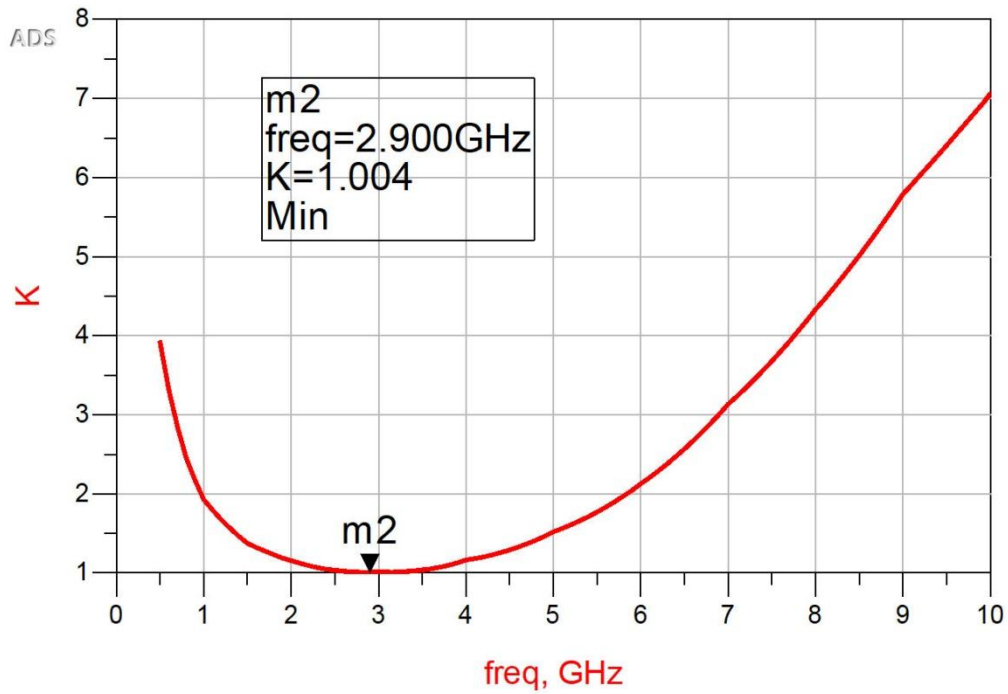

Stabilization of two-port

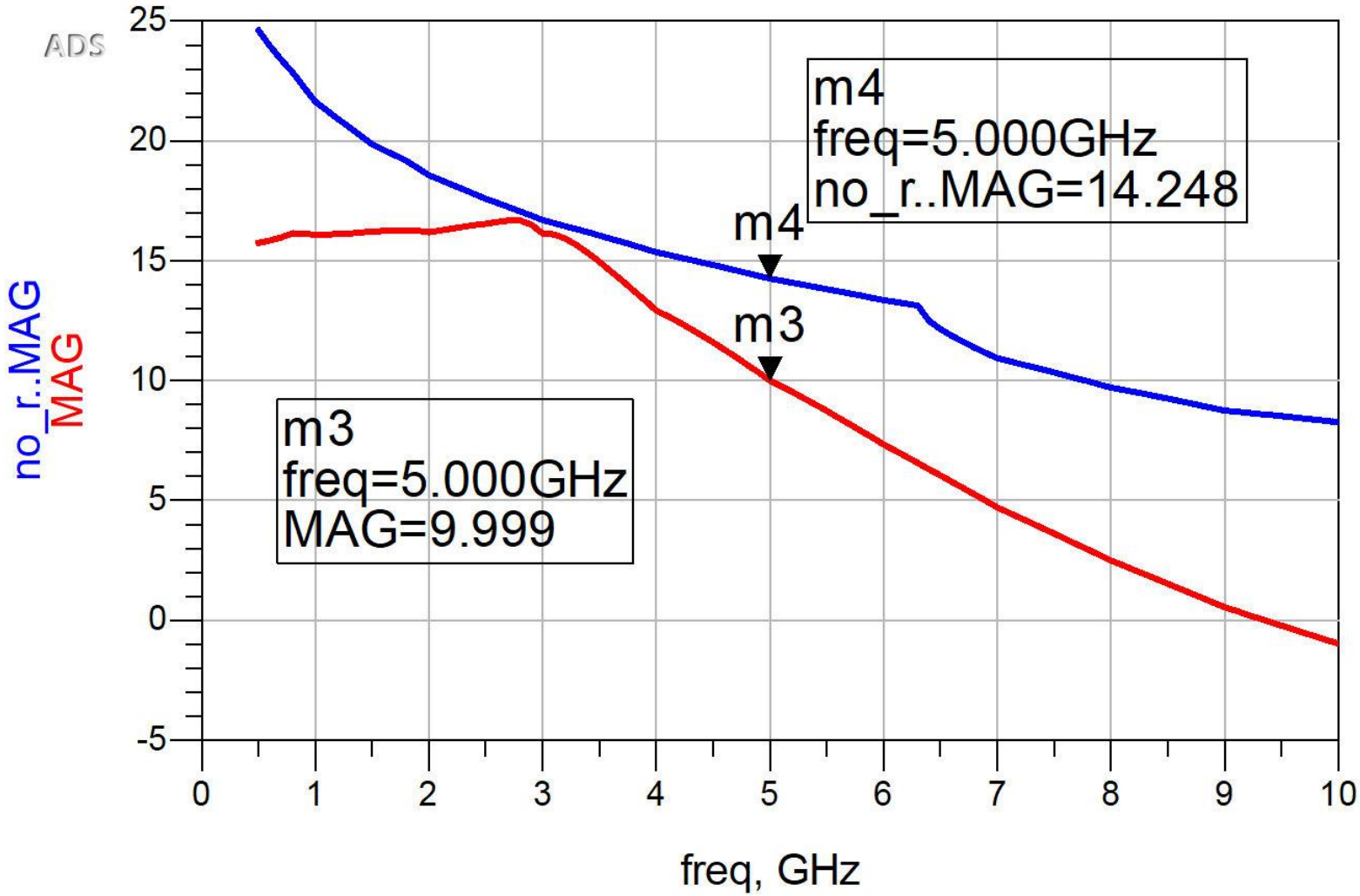

Contact

- Microwave and Optoelectronics Laboratory
- http://rf-opto.etti.tuiasi.ro
- rdamian@etti.tuiasi.ro